Hybrid inverter

358-010592-03

Felicitysolar®

Make life full of hope

USER GUIDE

IVGM25KHP3G3
IVGM20KHP3G3
IVGM15KHP3G3
IVGM12KHP3G3
IVGM10KHP3G3
IVGM9K9HP3G3
IVGM8KHP3G3



Revision History

Revision No.	Revision Date
V00	2026.03.24
V01	2025.05.18
V02	2026.09.02
V03	2026.11.06

NOTE: Due to the inherent update cycle of printed manuals, please refer to the latest electronic version available through official channels for the most up-to-date information.

Hybrid inverter

Contents

1.Safety & Warning 2
2.Product Introduction 2
2.1 Product Features 3
2.2 Basic System Architecture 3
2.3 Products Overview 4
3.Installation 6
3.1 Packing List 6
3.2 Poduct Handling Requirements 7
3.3 Installation Tools 8
3.4 Installation Environment 9
3.5 Mounting 10
4. Electrical connection 12
4.1 PV Connection 12
4.1.1 PV Module Selection 12
4.1.2 PV Module Wire Connection 13
4.2 Battery Connection 15
4.3 Grid, Load and Gen Port Connection 17
4.4 Earth Connection 20
4.5 Function Port Definition 20
4.6 Smart Meter & CT Connection 22
4.6.1 Only CT Connection (Recommend) 23
4.6.2 Only Meter Connection 24
4.6.3 Meter Connection with CTs(Conditional) 27
4.7 DRMS Connection 32
4.8 Lithium Battery Communication 34
4.9 Installation of WIFI Module 35
4.10 Wiring Diagram with Neutra lline Grounded 36
4.11Wiring Diagram with Neutral line Ungrounded 37
4.12 Typical Application Diagramof Diesel Generator 39
4.13 Three phase parallel connection diagram 40
5. Display and operation 41
5.1 Inverter Startupand Commissioning 41
5.1 Inverter Startup and Commissioning 41
5.1.2 Verify the PV Input 41
5.1.3 Verify the GRID Input 41
5.1.4 Power ON the Inverter | Single Inverter Systems 41
5.2 Operation ang Display Panel 42
5.3 Solar Power Curve 43
5.4 Basic Setting 44
5.5 Battery Setting 45
5.6 Work Mode Setting 47
5.7 Grid Setting 50
5.8 Gen Port Setting 55
5.9 Advanced Function 57
6.System Application 60
7.Warranty 64
8.Troubleshooting 64
9. APP Download the APP 65
10. Warning Code 65
11. Fault Code 66
12.Appendix 70

Purpose of This Manual

This manual provides essential information for the installation, operation, and maintenance of the hybrid solar inverter.
It is intended to help users:
Understand the basic functions and application scenarios of the inverter
Safely complete installation and initial operation
Avoid improper use that may result in equipment damage or safety risks

⚠ Important Notice

This manual does not cover all possible photovoltaic (PV) system configurations.
For complex system designs or customized applications, please consult a qualified system integrator.

How to Use This Manual

⚠ Before performing any operation on the inverter, read this manual completely and keep it available for future reference.

Due to continuous product development, specifications and functions may change.
The latest version of this manual is available at: https://www.felicitysolar.com

Safety Introductions

This chapter contains important safety and operating instructions. Read and keep this manual for future reference.

- Before using the inverter, please read the instructions and warning signs of the battery and corresponding sections in the instruction manual.
- Do not disassemble the inverter. If you need maintenance or repair, take it to a professional service center.
- Improper reassembly may result in electric shock or fire.
- To reduce risk of electric shock, disconnect all wires before attempting any maintenance or cleaning. Turning off the unit will not reduce this risk.
- Caution: Only qualified personnel can install this device with battery.
- Never charge a frozen battery.
- For optimum operation of this inverter, please follow required specififfication to select appropriate cable size. It is very important to correctly operate this inverter.
- Be very cautious when working with metal tools on or around batteries. Dropping a tool may cause a spark or short circuit in batteries or other electrical parts, even cause an explosion.
- Please strictly follow installation procedure when you want to disconnect AC or DC terminals. Please refer to "Installation" section of this manual for the details.
- Grounding instructions - this inverter should be connected to a permanent grounded wiring system. Be sure to comply with local requirements and regulation to install this inverter.
- Never cause AC output and DC input short circuited. Do not connect to the mains when DC input short circuits.

1. Safety & Warning

This manual provides relevant information with icons to highlight the physical and property safety of the user to avoid device damage and physical injury.
The Symbols used in this manual are listed as below:

Symbols	Name	Instruction
	Danger	Serious physical injury or even death may occur if not follow the relative requirements
	Warning	Physical injury or damage to the devices may occur if not follow the relative requirements
	Electrostatic sensitive	Damage may occur if not follow the relative requirements
	Hot surface	Sides of the device may become hot. Do not touch.
	Earth terminal	The inverter must be reliably grounded.
	Caution	Ensure that DC and AC side circuit breakers have been disconnected and wait at least 5 minutes before wiring and checking.
NOTE	Note	The procedures taken for ensuring proper operation.
	CE mark	The inverter complies with the CE directive.
	EU WEEE mark	Product should not be disposed as household waste.

2.Product Introduction

This hybrid solar inverter is designed for **residential and small commercial applications**, providing stable power supply through the integration of:

a、PV modules
b、Battery storage systems
c、Utility grid and optional generator

It supports both **on-grid and off-grid operation**, ensuring power availability during grid outages.

2.1 Product Features

230V / 400V three-phase pure sine wave output
Self-consumption and grid feed-in support
Automatic restart during AC recovery
Programmable power source priority (PV / Battery / Grid)
Multiple operating modes: On-grid, Off-grid
Power limiting function to prevent grid export overflow
Built-in WiFi monitoring & Solar Smart Cloud platform
4-channel PV input, 2 MPPTs, 1.6× overconfiguration capability
Wide battery voltage range
Max charge/discharge current: up to 50A
Generator input support with smart control
Time of Use, Selling First, Zero Export to Grid / CT modes
Parallel operation support: up to 12 units
Ip66 protection level
For installers:Feature availability may depend on system configuration and firmware version.

2.2 Basic System Architecture

The following illustration shows basic application of this inverter.
The inverter intelligently manages energy flow between these components to ensure:
-Optimal self-consumption
-Stable backup power during grid outages
Please refer to the Figure2.2-1 for details.
⚠ Important Notice
System architecture may vary depending on application requirements. Consult your system integrator for customized designs.
This inverter can power most household and office appliances, including:
-Refrigerators
-Air conditioners
-Motor-based appliances
However: **Ensure total load does not exceed inverter capacity**
High inrush current appliances should be evaluated by technical personnel

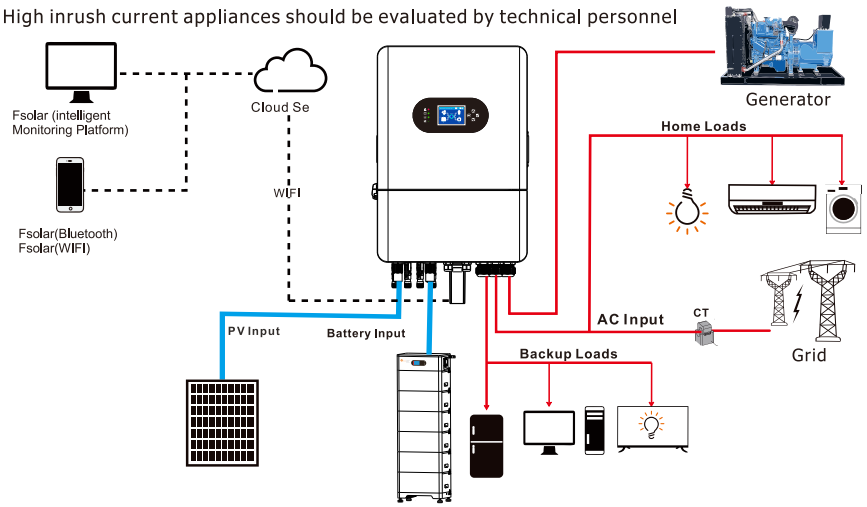

Figure 2.2-1 Block diagram of hybrid solar inverter system

2.3 Products Overview

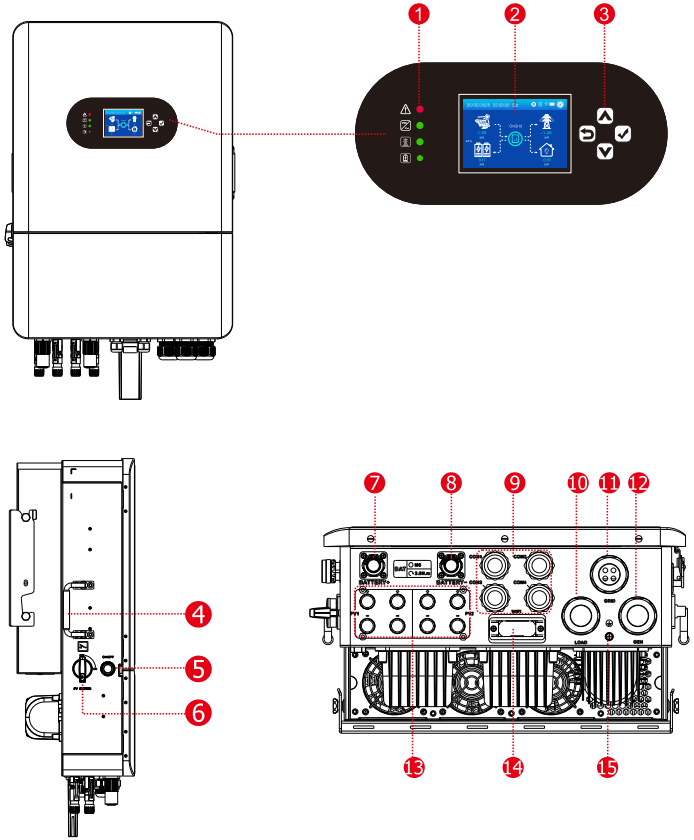

Figure 2.3-1 Products overview

1.Inverter Indicators
2. LCD Display
3. Function Buttons
4. Handle
5.Power on/off
6. PV Switch
7.Battery Input Positive
8.Battery Input Negative
9.COMM Interface
10.Backup Load Interface
11. Grid/Home Load Interface
12.GEN Interface
13.PV Input Interface
14.WIFI Interface
15.Grounding Point

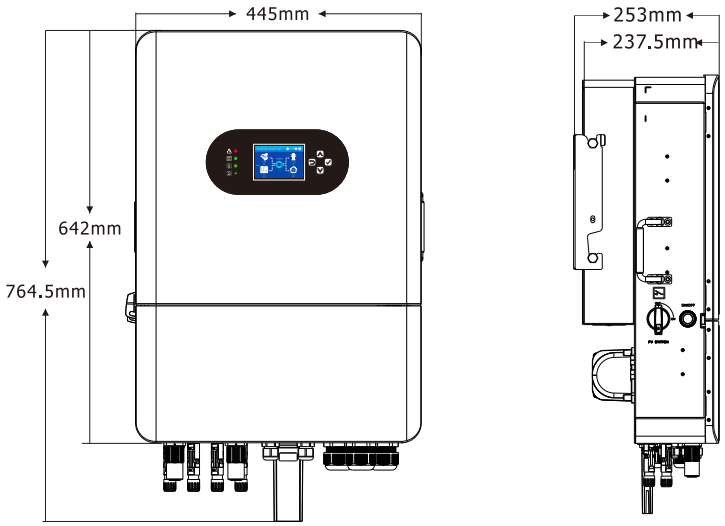

Figure 2.3-2 Inverter dimensions

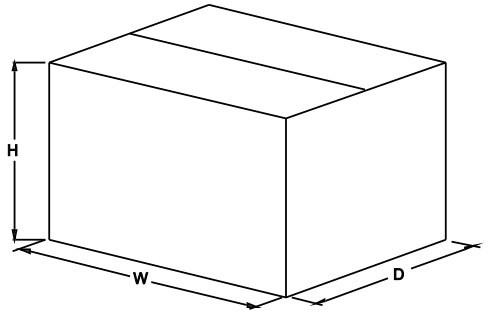

Table 2.3-1 Packages dimension and gross weight

Model	H (mm)	W (mm)	D (mm)	Net Weight (KG)	Gross Weight (KG)
IVGM25KHP3G3 IVGM20KHP3G3 IVGM15KHP3G3 IVGM12KHP3G3 IVGM10KHP3G3 IVGM9K9HP3G3 IVGM8KHP3G3	367	789	568	39.4	48.6

3. Installation

3.1 Packing List

The inverter 100% strictly inspected before package and delivery. Please check the product package and fittings carefully before installation.

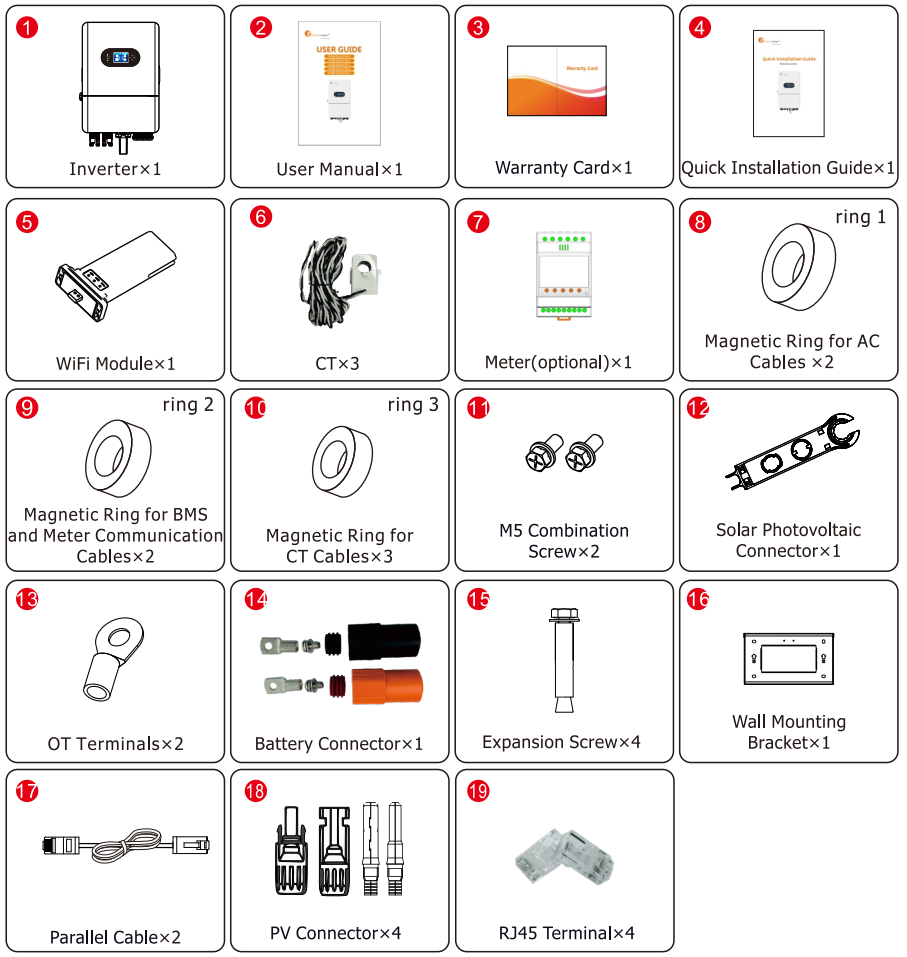

Figure 3.1-1 Packing List

Packing box of magnetic ring

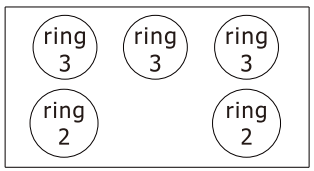

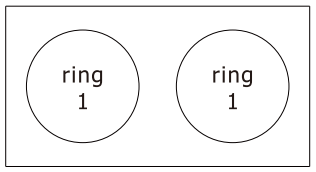

*ring 1:32x50x20mmx2
ring 2:20x32x15mmx2
ring 3:19x31x30mmx3

Table 3.1-1 Detailed delivery list

No.	Name	Description	Quantity
1	Inverter	Inverter	1
2	User manual	User manual	1
3	Warranty card	Warranty card	1
4	Quick installation guide	Quick installation guide	1
5	WiFi module	For installing the WFI module	1
6	CT	Meter and anti backflow(ratio：100A/50mA)	3
7	Meter(optional)	Meter and anti backflow	1
8	Ring 1	Magnetic ring 1 for AC cables	2
9	Ring 2	Magnetic ring 2 for BMS and Meter communication cables	2
10	Ring 3	Magnetic ring 3 for CT cables	3
11	Screws	M5 Combination screw	2
12	Solar photovoltaic connector special spanner	Used for installing and disassembling photovoltaic systems	1
13	OT terminals	For external ground connection	2
14	Battery connector	Connection ports for batteries and inverter Bat Port	1
15	Expansion screw	Used for securing the product's wall mount	4
16	Wall mounting bracket	Used to fix the inverter to the wall	1
17	Parallel cable	Used for parallel wiring	2
18	PV connector	PV Port Connectors	4 pairs
19	RJ45 Terminal	Used for creating custom communication cables	4

3.2 Poduct Handling Requirements

Lift the inverter out of the paper package and transport it to the designated installation.

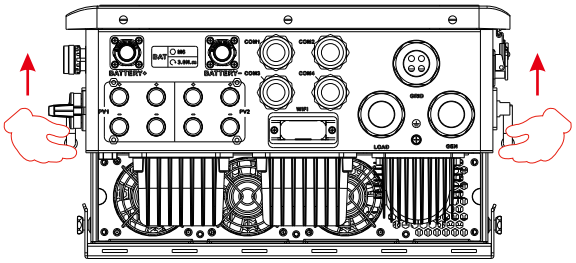

Figure 3.2-1 Lift the inverter

WARNING:

- Arrange an appropriate number of personnel to carry the inverter according to its weight, and installation personnel should wear protective equipment such as anti-impact shoes and gloves.
- Placing the inverter directly on a hard ground may cause damage to its metal enclosure.
- Protective materials such as sponge pad or foam cushion should be placed underneath the inverter.
- Move the inverter by one or two people or by using a proper transport tool. Move the inverter by holding the handles on it. Do not move the inverter by holding the terminals.

DANGER:

Improper handling may cause personal injury!

3.3 Installation Tools

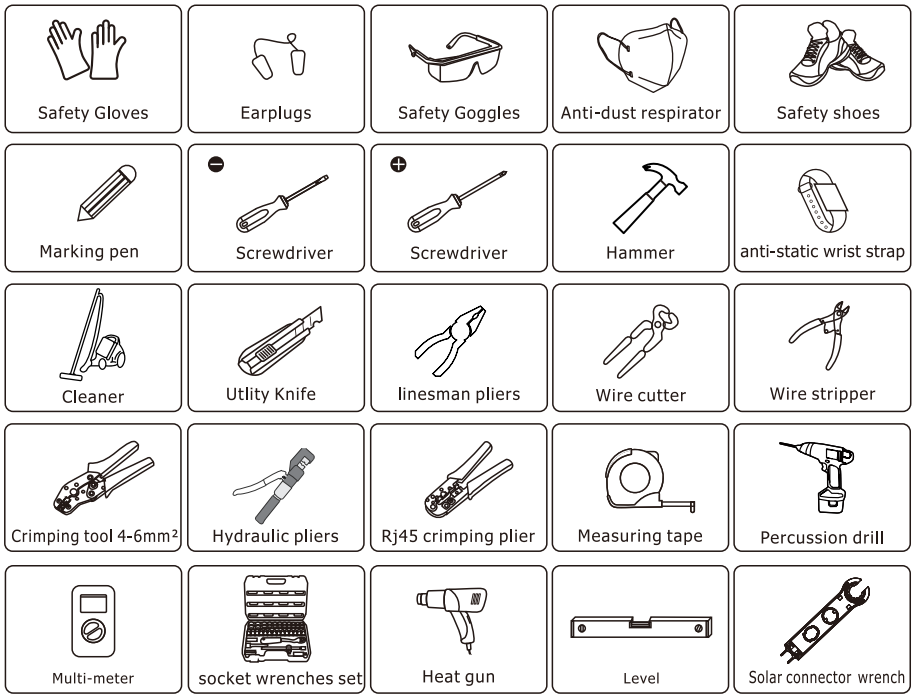

Figure 3.3-1 Installation tools

3.4 Installation Environment

This Hybrid inverter is designed for outdoor use(IP66), make sure the installation environment meets below conditions:

◇Choose a dry, clean, and tidy place, convenient for installation
◇Ambient temperature range: -40℃ ~ 60℃
◇Relative humidity: 0 ~ 100% (non-condensed)
◇Install in a well-ventilated place
◇No flammable or explosive materials close to inverter
◇The AC overvoltage category of inverter is category III

WARNING:

- Inverter cannot be installed near flammable, explosive or strong electro-magnetic equipment.
- Do not use impact drivers to tighten any fasteners on the inverter.

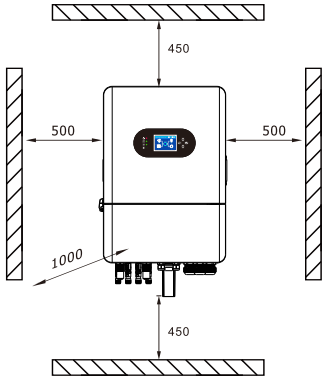

Figure 3.4-1 Installation space of one inverter

Considering the following points before selecting where to install:

- Please select a vertical wall with load-bearing capacity for installation, suitable for installation on concrete or other non-flammable surfaces, installation is shown below.
- Install this inverter at eye level in order to allow the LCD display to be read at all times.
- The ambient temperature should be between -40~60℃ to ensure optimal operation.
- Be sure to keep other objects and surfaces as shown in the diagram to guarantee sufficient heat dissipation and have enough space for removing wires.

Table 3-4-1 Detailed installation space

	Minimum clearance
Lateral	500mm
Top	450mm
Bottom	450mm

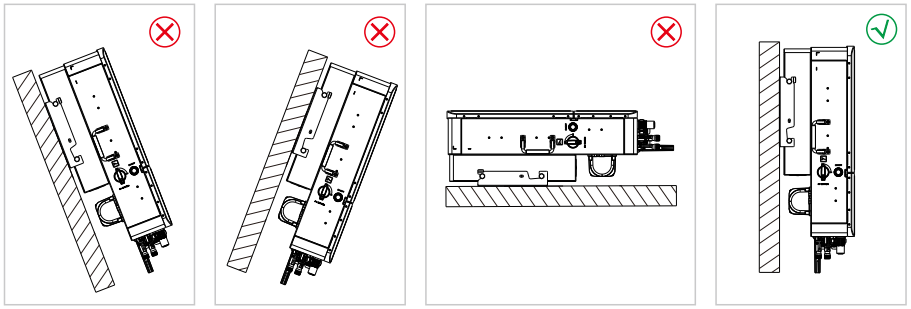

Figure 3.4-2 Installation position

WARNING:

- Do not open the cover of the inverter or replace any part as incomplete inverter may cause electric shock and damage the device during operation.

The installation of inverter should be protected under shelter from direct sunlight or bad weather like snow,rain, lightning etc.

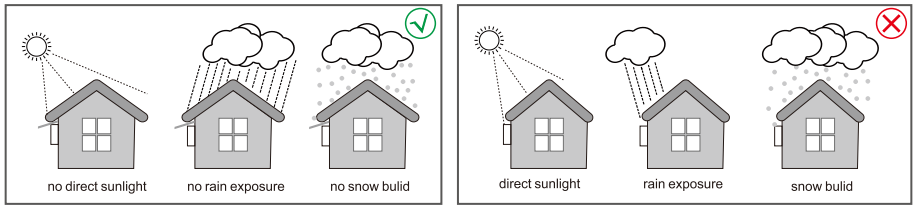

Figure 3.4-3 Installation position

3.5 Mounting

WARNING:

- The inverter is too heavy, please be careful when lifting out from the package.
- Hold the handle to lift out the inverter.

DANGER:

- The inverter is heavy, Please arrange an appropriate number of personnel to carry the inverter and the installer should wear impact-proof shoes, gloves and other protective equipment.
- Placing the inverter directly on hard ground may damage its metal casing. · Protective materials such as sponge pads or foam pads should be placed underneath the inverter.
- Hold the handle to move the inverter, Do not hold the terminal to move the inverter.

The inverter is suitable for mounting on concrete or other non-combustible surface only.

Step 1. When installing wall-mounted components, please first level them with the spirit level on the wall-mounted components, and then drill holes for installation. Please use the template and the M10 drill bit (as shown in the following figure) to drill 4 holes at the correct positions, with a depth of 45-50mm. Insert the expansion bolt into the hole with a suitable hammer, and then unscrew the nut of the expansion bolt. Install the wall-mounted accessory into the expansion screw and tighten the expansion nut that comes with the expansion screw (after tightening the expansion screw nut, please ensure that the wall-mounted accessory is firmly fixed to the wall).

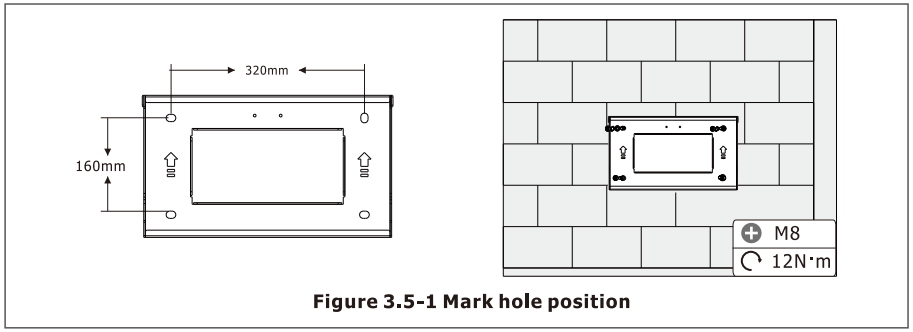

Figure 3.5-1 Mark hole position

Step 2. Lift and hold the inverter to ensure that the wall-mounted component on the inverter cabinet is aligned with the one fixed on the wall, as shown in the figure. Install it onto the wall-mounted component on the wall to complete the installation.

After the wall-mounted installation is completed, please fasten it with M5X12 screws.

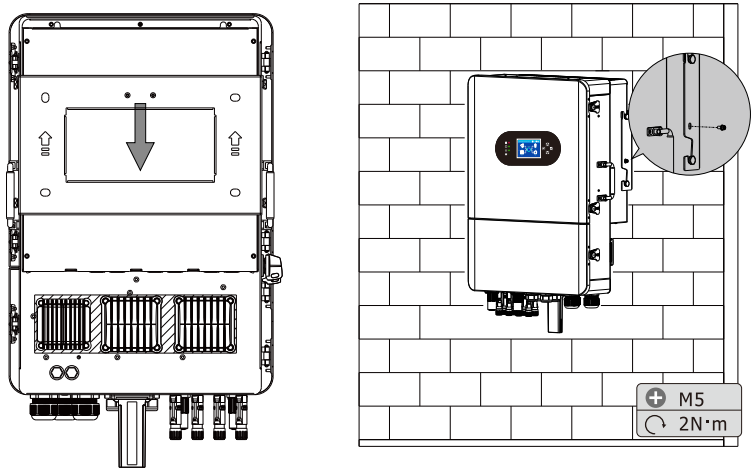

Figure 3.5-2 Install Inverter hanging plate

4 Electrical Connection

◇High voltages in power conversion circuits. Lethal hazard of electric shock or serious burns.

◇All work on the PV modules, inverters, and battery systems must be carried out by qualified personnel only.

◇Wear rubber gloves and protective clothing (protective glasses and boots) when working on high voltage/high current systems such as INVERTER and battery systems.

4.1 PV Connection

Before connecting PV panels/strings , please make sure requirements are followed as below:

1. Install a separately DC circuit breaker between inverter and PV modules.
2. The total short-circuit current of PV string must not exceed inverter's Max DC Current.
3. The minimum isolation resistance to ground of the PV string must exceed 33.33kΩ in case of any shock hazard.
4. PV string should not connect to earth/grounding conductor.
5. Use the right PV plugs in the accessory box.

WARNING:

- To avoid any malfunctions, do not connect PV modules that may have leakage current to the inverter.
- It is recommended to use a PV junction box with surge protection. Otherwise, when a lightning strike occurs in the PV module, damage may be caused to the inverter.

4.1.1 PV Module Selection

When selecting proper PV modules, please be sure to consider below parameters:

1. Open circuit Voltage (Voc) of PV modules can not exceed Max.PV Input Voltage of inverter.
2. Open circuit Voltage (Voc) of PV modules should be higher than Min.PV Input Voltage of inverter.
3. The PV modules used to connected to this inverter shall be ClassA rating certified according IEC61730.

Please refer to chapter 12 Appendix for the specifications of the PV panels

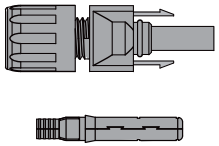

Figure 4.1-1 DC+ male connector

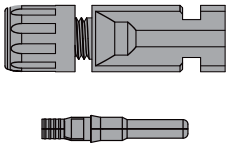

Figure 4.1-2 DC- female connector

WARNING:

- High voltages in power conversion circuits. Lethal hazard of electric shock or serious burns.
- All work on the PV modules, inverters, and battery systems must be carried out by qualified personnel only.
- Wear rubber gloves and protective clothing (protective glasses and boots) when working on high voltage/high current systems such as INVERTER and battery systems.

4.1.2 PV Module Wire Connection

1. Switch the Grid Supply Main Switch(AC)OFF.
2. Switch the DC Isolator OFF.
3. Assemble PV input connector to the inverter.

WARNING:
- Before connection, please make sure the polarity of PV array matches the "PV+" and "PV-" symbols
- Before connecting to inverter, please make sure the open circuit voltage of PV strings haven' t exceeded the max.PV input voltage of the inverter.
- Please use approved DC cable for PV system.

To reduce the risk of injury, please use the proper recommended cable size as below.
Table 4.1-2 Detailed wire size

Inverter Model	Wire Size	Cable(mm²)
IVGM25KHP3G3 IVGM20KHP3G3 IVGM15KHP3G3 IVGM12KHP3G3 IVGM10KHP3G3 IVGM9K9HP3G3 IVGM8KHP3G3	10AWG	6mm²

The steps to assemble the PV connectors are listed as follows:
Setp 1. Strip the insulation of the PV wire by 7mm,disassemble the cap nut of the connetctor, thread one PV wire through the cap nut of the connector. Repeat this operation with all the PV wires, paying special attention to the polarity of the connector,as shown in Figure 4.1-1.

Note: PV terminals with different polarities have distinct appearancesand must not be connected incorrectly

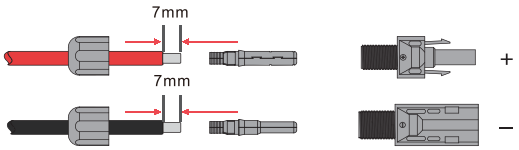

Figure 4.1-1 Pv cables and pv plugs

Setp 2. Crimping metal terminals with crimping pliers,as shown in Figure 4.1-2.

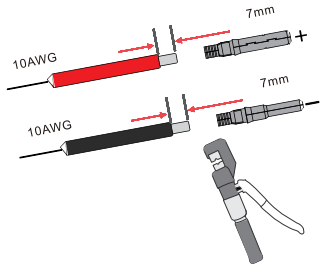

Figure 4.1-2 Crimp the terminal to the wire

Setp3. Insert the contact pin to the top part of the connector and completely tighten the cap nut to the top part of the connector,as shown in Figure 4.1-3.

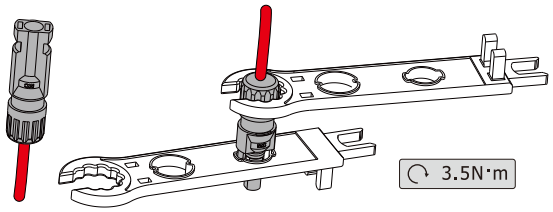

Figure 4.1-3 Connector with cap nut screwed on

Step4. Screw the cap on and plug it onto inverter side. There will be a click sound if connectors are inserted correctly into PV plugs,as shown in Figure 4.1-4.

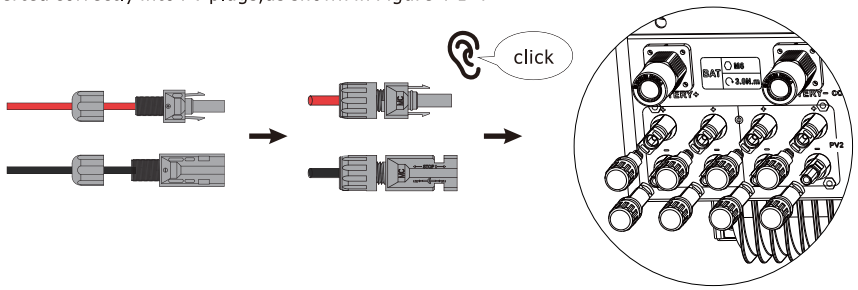

Figure 4.1-4 The PV plug is connected to the inverter

Danger:
Sunlight hits the panels to create voltage, and high voltages in series can be life-threatening. Therefore, before connecting the DC input line, it is necessary to shield the solar panel with opaque material and put the DC switch in the "OFF" state, otherwise, the high voltage of the inverter may lead to a life-threatening situation.

Warning:
Please do not turn off the DC isolator in the presence of high voltage or current. Please use its own DC power connector from the inverter accessories. Do not interconnect the connectors of different manufacturers.Max. DC input current should be 20A. if exceeds, it may damage the inverter and it is not covered by felicitysolar warranty.

4.2 Battery Connection

For safe operation and compliance, a separate DC over-current protector or disconnect device is required between the battery and the inverter. In certain applications, a disconnect switch may not be necessary, but it is always essential to have DC overcurrent protection in place. Refer to the typical amperage in the page 36(Typical application diagram of grid power) for the required fuse or circuit breaker size.

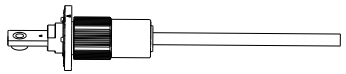

Figure 4.2-1 BAT plug connector

WARNING:

- Please use approved DC cable for battery system.

Table 4.2-1 Battery cable wire size

Inverter Model	Wire Size	Cable(mm²)
IVGM25KHP3G3 IVGM20KHP3G3 IVGM15KHP3G3 IVGM12KHP3G3 IVGM10KHP3G3 IVGM9K9HP3G3 IVGM8KHP3G3	6AWG~4AWG	13mm²~21mm²

The steps to assemble the battery plug connectors are listed as follows:

Step1: The wire passes through the rubber plug and outer cover, as shown in Figure 4.2-2.

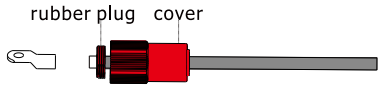

Figure 4.2-2

Step2: Crimp the metal terminal, as shown in Pic 3.5, as shown in Figure 4.2-3.

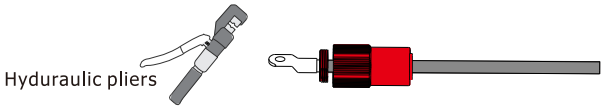

Figure 4.2-3

Step3: Insert the wire lugs of the pressed wire into the terminal sockets on the machine, as shown in Figure 4.2-4.

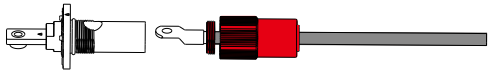

Figure 4.2-4

Step4: Locking screw, as shown in Figure 4.2-5.

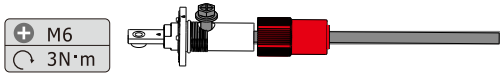

Figure 4.2-5

Step 5: Connect the battery terminal to the inverter. Ensure that the battery polarity is connected correctly, as shown in Figure 4.2-6.

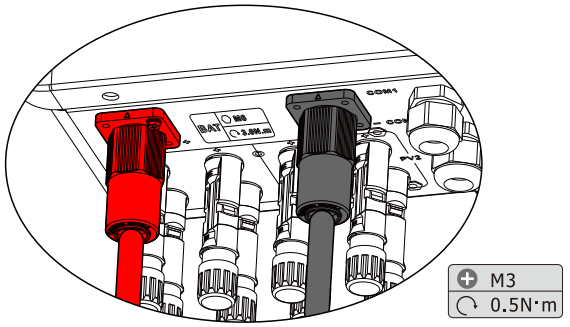

Figure 4.2-6 The battery terminal is connected to the inverter

4.3 Grid, Load and Gen Port Connection

Before connecting to the grid, a separate AC breaker must be installed between the inverter and the grid, and also between the load and the inverter. This will ensure the inverter can be securely disconnected during maintenance and fully protected from over current. Check the recommended values in the following tables according to local regulations in each country. The recommended specifications for AC breakers here are based on the Max.Continuous AC passthrough current of inverter, you can also choose the AC breaker of backup and home side according to the actual total operating current of all the backup loads and home loads.

WARNING:

• All wiring must be performed by a qualified personnel.It is very important for system safety and efficient operation to use appropriate cable for AC input connection. To reduce risk of injury, please use the proper recommended cable as below.

AC Breaker for Load

Table 4.3-1 Maximum rated current of the AC breaker for Load

Inverter Model	Maximum rated current of the AC breaker
IVGM25KHP3G3 IVGM20KHP3G3 IVGM15KHP3G3 IVGM12KHP3G3	100A
IVGM10KHP3G3 IVGM9K9HP3G3 IVGM8KHP3G3	60A

AC Breaker for grid

Table 4.3-2 Maximum rated current of the AC breaker for grid

Inverter Model	Maximum rated current of the AC breaker
IVGM25KHP3G3 IVGM20KHP3G3 IVGM15KHP3G3 IVGM12KHP3G3	100A
IVGM10KHP3G3 IVGM9K9HP3G3 IVGM8KHP3G3	60A

There are three terminal blocks with "Grid" "Load" and "GEN" markings. Please do not misconnect input and output connectors.

Grid	This works like a conventional arid-tied inverter. It is both an input and outputconnection for non-essential load and supply.
Load	Connection of essential loads such as lighting, security systems, and Internet
Gen	Generator connection

WARNING:

In final installation, breaker certified according to IEC 60947-1 and IEC 60947-2 shall be installed with the equipment.

All wiring must be performed by a qualified personnel. It is very important for System safety and efficient operation to use appropriate cable for AC input connection. To reduce risk of injury, please use the proper recommended cable as below.

Grid connection and Load connection (Copper wires) (bypass)

Table 4.3-3 Grid connection and Load connection

Inverter Model	Wire Size	Cable(mm²)
IVGM25KHP3G3 IVGM20KHP3G3 IVGM15KHP3G3 IVGM12KHP3G3	4AWG~2AWG	21mm²~34mm²
IVGM10KHP3G3 IVGM9K9HP3G3 IVGM8KHP3G3	6AWG~4AWG	13mm²~21mm²

WARNING:

• Be sure that AC power source is disconnected before attempting to wire it to the unit.

Please follow below steps to implement Grid, load and Gen port connection:

1. Before making Grid, load and Gen port connection, be sure to turn off AC breaker or disconnect first.
2. Peel off the insulation layer of the AC wire by about 10mm and insert the AC lead into the circular hole. Tighten it with a cross-head screwdriver and check if the cable is loose or stuck. Please ensure that the corresponding N wire and PE wire are also connected to the relevant terminals.
3. Make sure all the wires are securely and completely connected.
4. Some appliances, such as air conditioners and refrigerators, may need a time delay before reconnecting them after a power outage.This delay allows the refrigerant gas to stabilize and prevents potential damage. Check if your appliance has a built-in time-delay function before connecting it to our inverter. Examples of appliances that may require a delay include:

- Air conditioners: Balancing refrigerant gas.
- Refrigerators: Stabilizing the compressor.
- Freezers: Allowing the cooling system to balance.
- Heat pumps: Protecting against power fluctuations.

This inverter will protect your appliances by triggering an overload fault if no time delay is present. However, internal damage may still occur. Refer to the manufacturer's documentation for specific time-delay requirements.

LOAD,GRID,GEN,PE:
Please strip the cables to the dimensions shown in the following picture with professional tools before installation

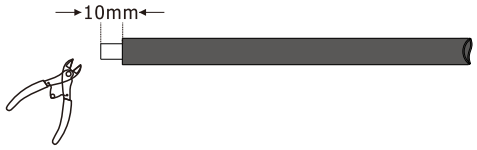

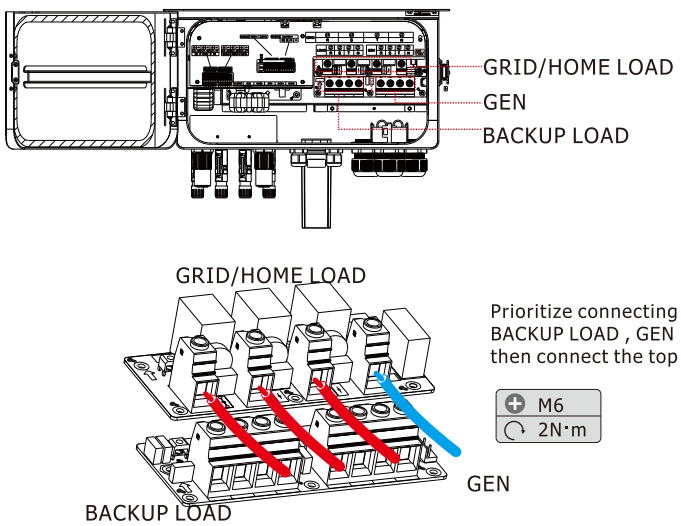

Figure 4.3-1 Gen, Grid, Backup/Home Load and PE port

WARNING:
• All wiring must be carried out by professionals!

Schematic diagrams of the magnetic rings for BACKUP LOAD and GEN

ring 1:32x50x20mm
Wind the wire at the load port around the magnetic ring once, and then pass one end of the wire through the magnetic ring.
The LOAD terminal and GEN terminal are connected to the inverter according to the silk-screen printing on the chassis.

ring 1:32x50x20mm
Wind the wire of the Gen port around the magnetic ring once, and then pass one end of the wire through the magnetic ring.
The load terminals and GEN terminals are connected to the inverter according to the silk-screen printing on the chassis.

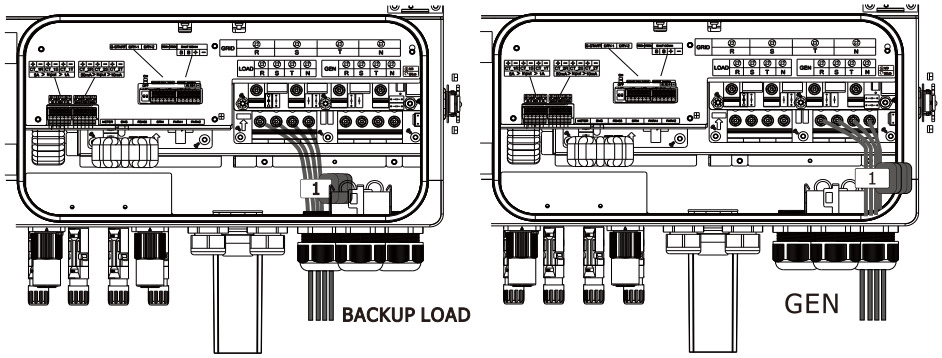

4.4 Earth Connection(Mandatory)

Ground cable shall be connected to ground plate on grid side,this prevents electric shock if the original protective conductor fails.

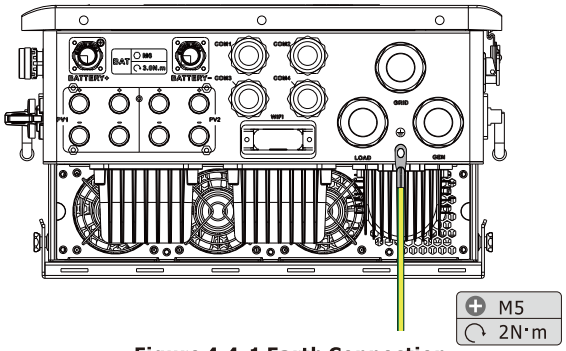

Figure 4.4-1 Earth Connection

The conductor should be made of the same metal as the phase conductors.

WARNING:
Inverter has built-in leakage current detection circuit. The type A RCD can be connected to the inverter for protection according to the local laws and regulations. If an external leakage current protection device is connected, its operating current must be equal to 10mA/KVA or higher, for this series of inverter it should be 300mA or higher, otherwise inverter may not work properly

4.5 Function Port Definition

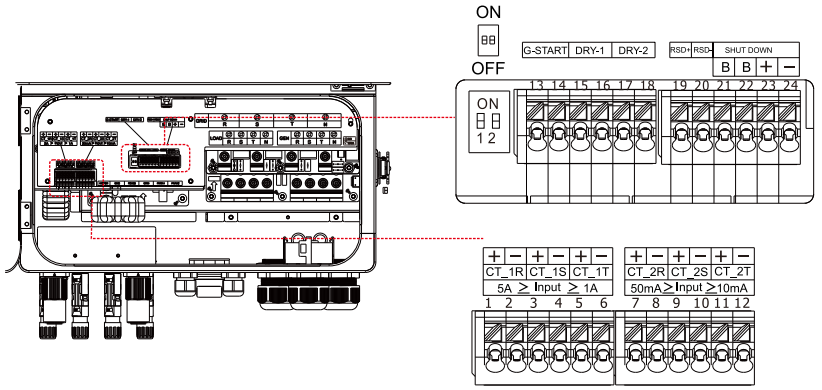

Figure 4.5-1 Function Port Definition

CT-R (1,2,7,8): current transformer (CT-R) for"zero export to CT"mode clamps on L1 when in three phase system. Polarity sensitive.
CT-S (3,4,9,10): current transformer (CT-S) for"zero export to CT"mode clamps on L2 when in three phase system. Polarity sensitive.
CT-T (5,6,11,12): current transformer (CT-T) for"zero export to CT"mode clamps on L3 when in three phase system. Polarity sensitive.
If the secondary current of CT is within the range of 1A-5A, use terminals 1-6. If the secondary current of CT is within the range of 10mA-50mA, use terminals 7-12.

WARNING:
Do not incorrectly connect the current transformer (CT) with a range of 1A-5A to the interfaces (7~12) designed for 10mA-50mA; otherwise, it may cause damage to the product.

G-start (13,14): dry contact signal for startup the diesel generator. When the "GEN signal" is active, the open contact (GS) will switch on (no voltage output).
DRY-1 (15,16): dry contact output.When the inverter is in off-grid mode and the "Neutral-Ground Relay"is active, the dry contact will switch on.
DRY-2 (17,18): reserved.
RSD+,RSD- (19,20): when battery is connected and the inverter is in "ON" status, it will provide 12Vdc.
SHUT DOWN (21,22,23,24): if the terminal "B" & "B" (21&22) is short-circuited with wire connection, or there's 12Vdc input at the terminal "+ "& "- " (23&24), then the 12Vdc of RSD+ & RSD- will disappear immediately, and the inverter will shutdown immediately.

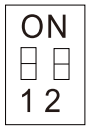

SW:DIP Switch for communication setting of parallel system.

SW is ON when any of PIN1 or PIN2 is ON, and OFF only when both PIN1 and PIN2 are OFF.In parallel system, set the"SW"according to the following table.

Quantity	Inv1 (master)	Inv2	Inv3	Inv4	Inv5	Inv6	Inv7	Inv8	Inv9	Inv10	Inv11	Inv12
1	OFF											
2	ON	ON										
3	ON	OFF	ON									
4	ON	OFF	OFF	ON								
5	ON	OFF	OFF	OFF	ON							
6	ON	OFF	OFF	OFF	OFF	ON						
7	ON	OFF	OFF	OFF	OFF	OFF	ON					
8	ON	OFF	OFF	OFF	OFF	OFF	OFF	ON				
9	ON	OFF	OFF	OFF	OFF	OFF	OFF	OFF	ON			
10	ON	OFF	OFF	OFF	OFF	OFF	OFF	OFF	OFF	ON		
11	ON	OFF	OFF	OFF	OFF	OFF	OFF	OFF	OFF	OFF	ON	
12	ON	OFF	OFF	OFF	OFF	OFF	OFF	OFF	OFF	OFF	OFF	ON

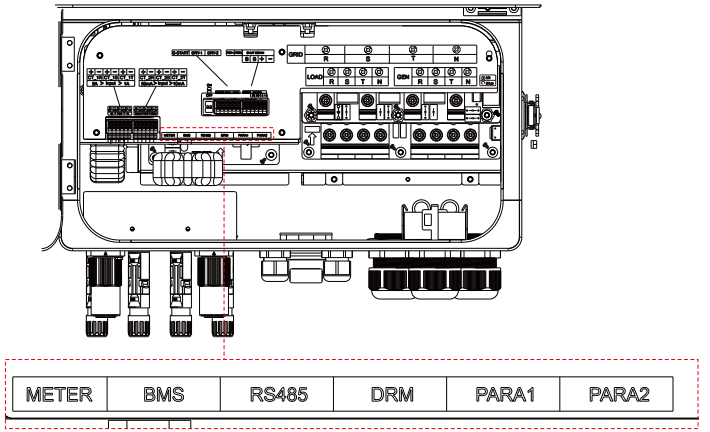

METER: METER port for Meter communication.
BMS: BMS port for battery communication.
RS485: RS485 port for Modbus communication.
DRMS: Logic interface for AS/NZS 4777.2:2020.
PARA1: Parallel communication port 1.
PARA2: Parallel communication port 2. (PARA 1 and 2 are same and have no particular orders)

4.6 Smart Meter & CT Connection

By utilizing CT and Smart Meter, the inverters can accurately monitor current flow to achieve functions such as measuring power consumption or ensuring zero power export to the grid. There are three selectable installation methods for CT and smart meter. The default installation method is to use the CTs that come with the packaging box, When the distance between the AC distribution box and the hybrid inverter exceeds 10 meters, which means that the wire length of the CT needs to exceed 10 meters, it is recommended to use a Smart Meter instead of three CTs. If the current to be measured is greater than 100 A, the default three CTs also need to be replaced with Smart Meters or larger CTs. Please contact the support team to confirm which specification of CT or Smart Meter to use.
In addition, in a parallel system, the CTs or Smart Meter should be connect to the Master.

4.6.1 Only CT Connection (Recommend)

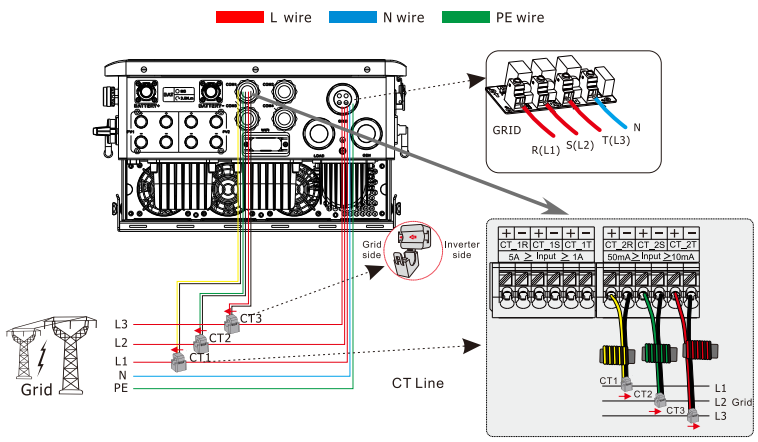

Figure 4.6-1 CT Connection

Note: CT Description
1. The default transformation ratio for CT is 2000:1;
2. The default range of CT is 100A, the ratio is 100A:50mA.

WARNING:
- In a parallel system with more than 2 inverters, the CT needs to use the 300A/5A specification,and connect to the Master.

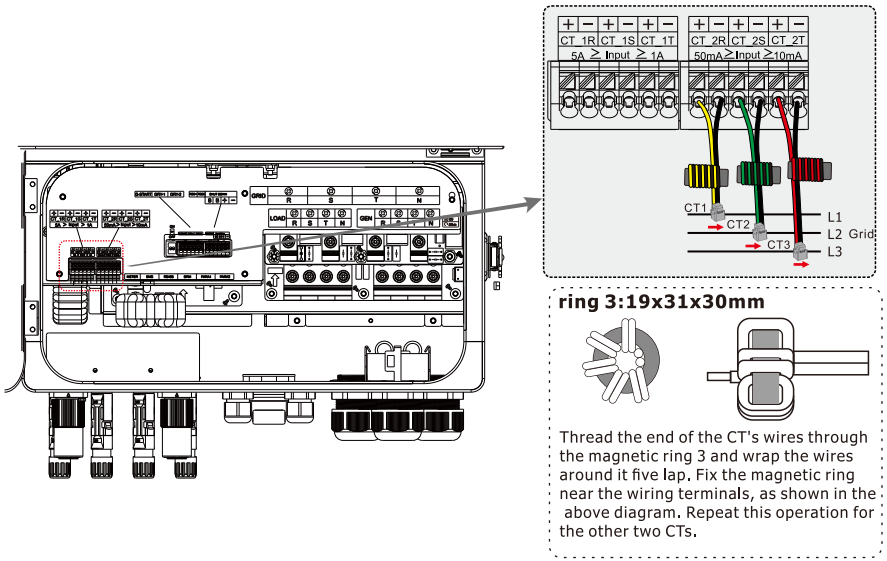

Figure 4.6-2 CT Connection with magnetic ring

4.6.2 Only Meter Connection

There are two kinds of Smart Meter, one is pass-through Smart Meter, and the other is Smart Meter with external CTs, The Smart Meter brands that inverters have been matched with include Eastron and CHINT. The recommended models here are not all compatible models.It is recommended to purchase Smart Meter from authorized distributors of Felicitysolar,otherwise it may not be able to be used due communication mismatch.The baud rate of these Smart Meters remains at 9600, with their ID addresses retaining the default value of 1.
NOTE: The default range of the Smart Meter(Eastron and CHINT) is 100A.

Table:4.6-1:Meter interface

NO.	P1	P2	P3	P4	P5	P6	P7	P8
Function	/	/	/	/	/	/	Meter_485B	Meter_485A

The pass-through Smart Meter typically used in IVGM systems to detect grid voltage and current direction and magnitude, further to instruct the operation condition of IVGM inverter via RS485 communication.See Table 4.6-1.

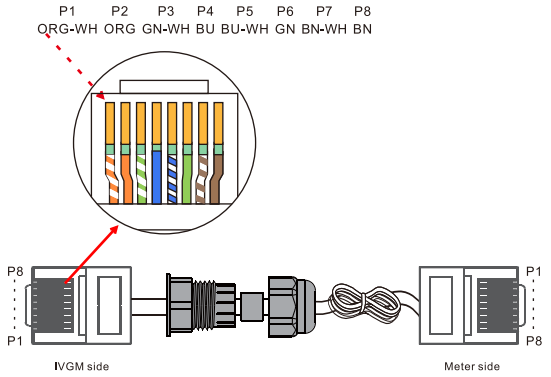

Figure 4.6-3 Meter interface

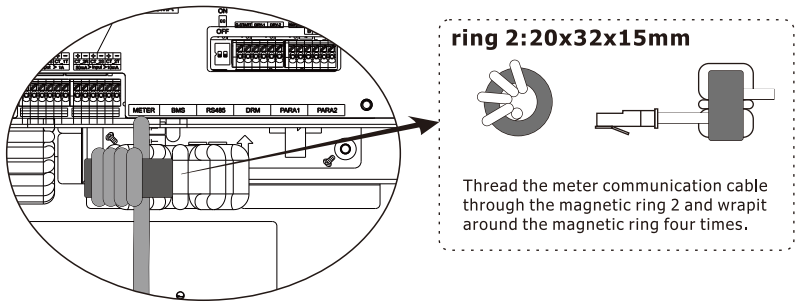

Figure 4.6-4 Meter connection with magnetic ring

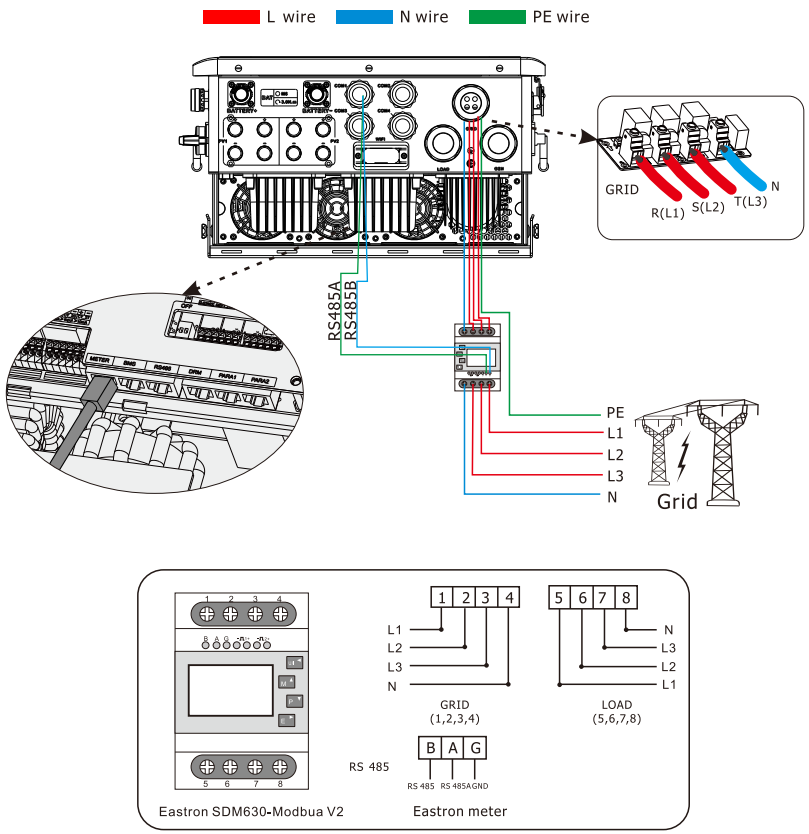

Figure 4.6-5 Meter Connection with Eastron meter

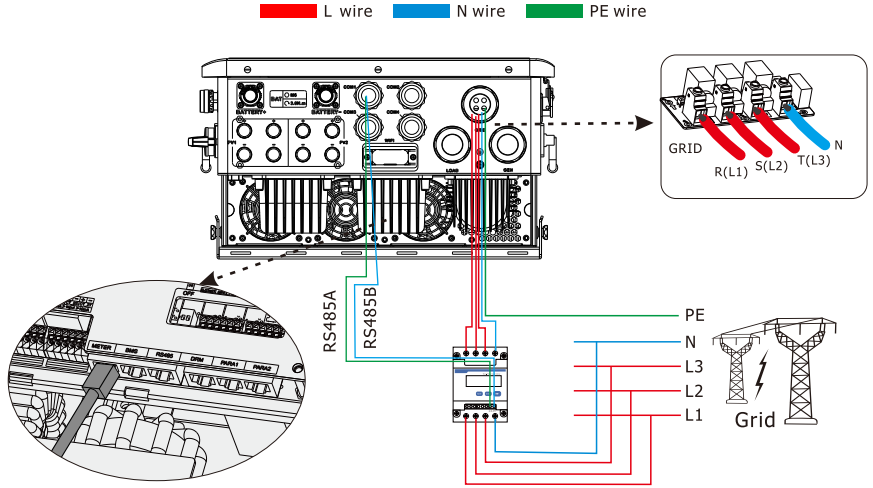

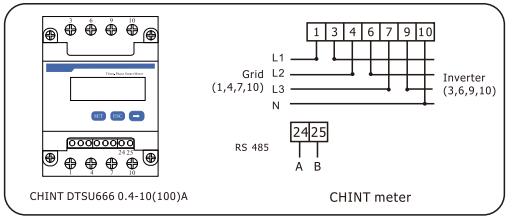

Figure 4.6-6 Meter Connection with CHINT meter

4.6.3 Meter Connection with CTs(Conditional)

The anti-reverse flow function is achieved through real-time communication between the electricity meter and the inverter. The electricity meter communicates with the inverter via the RS485 interface. The electricity meter monitors the grid information in real time through its CT and responds and transmits information such as grid power to the inverter in real time. The inverter adjusts its own power based on the power information of the grid port it receives, thereby indirectly controlling the net flow of the grid port to ensure that it does not exceed the maximum allowable current.

In a parallel system with more than 2 inverters, the CT needs to use the 300A/5A specification,and the Smart Meter should be connect to the Master.

Table:4.6-2:Meter interface

NO.	P1	P2	P3	P4	P5	P6	P7	P8
Function	/	/	/	/	/	/	Meter_485B	Meter_485A

The Smart Meter with external CTs typically used in IVGM systems to detect grid voltage and current direction and magnitude, further to instruct the operation condition of IVGM inverter via RS485 communication.See Table 4.6-1.
NOTE: The meter(Eastron and CHINT) must not be connected to CTs with secondary current exceeding 6A to prevent risk of damage.

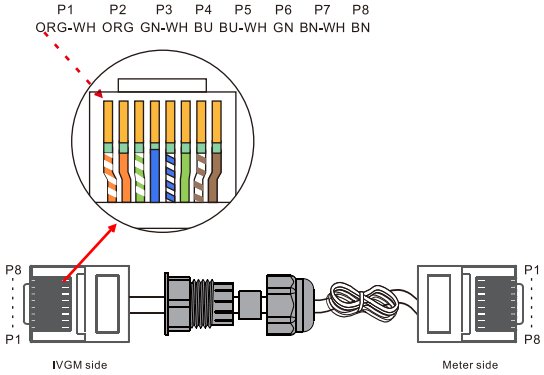

Figure 4.6-7 Meter interface

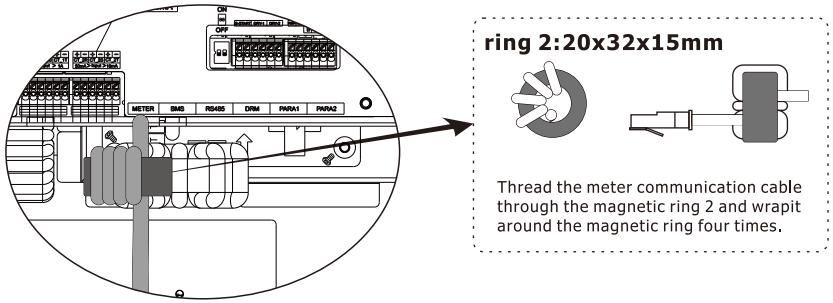

Figure 4.6-8 Meter connection with magnetic ring

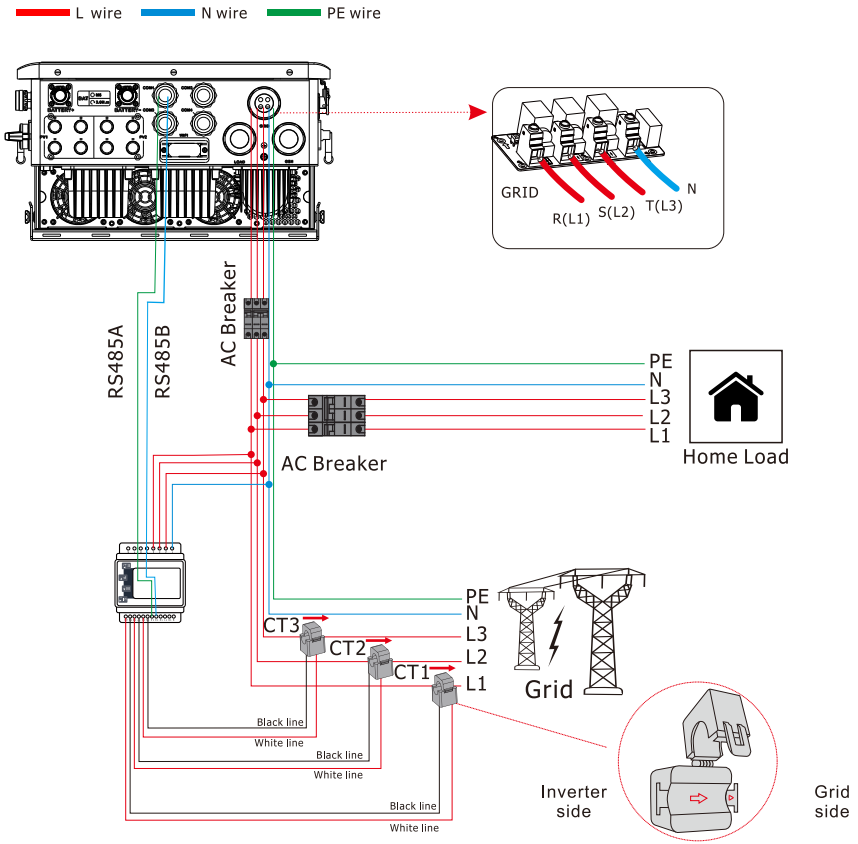

Figure 4.6-9 Smart Meter&CT Connection with Eastron meter

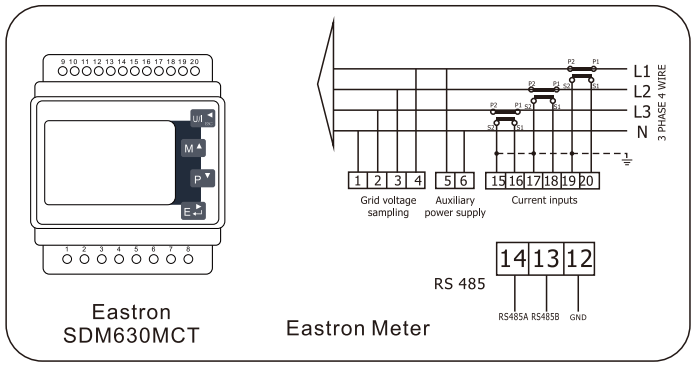

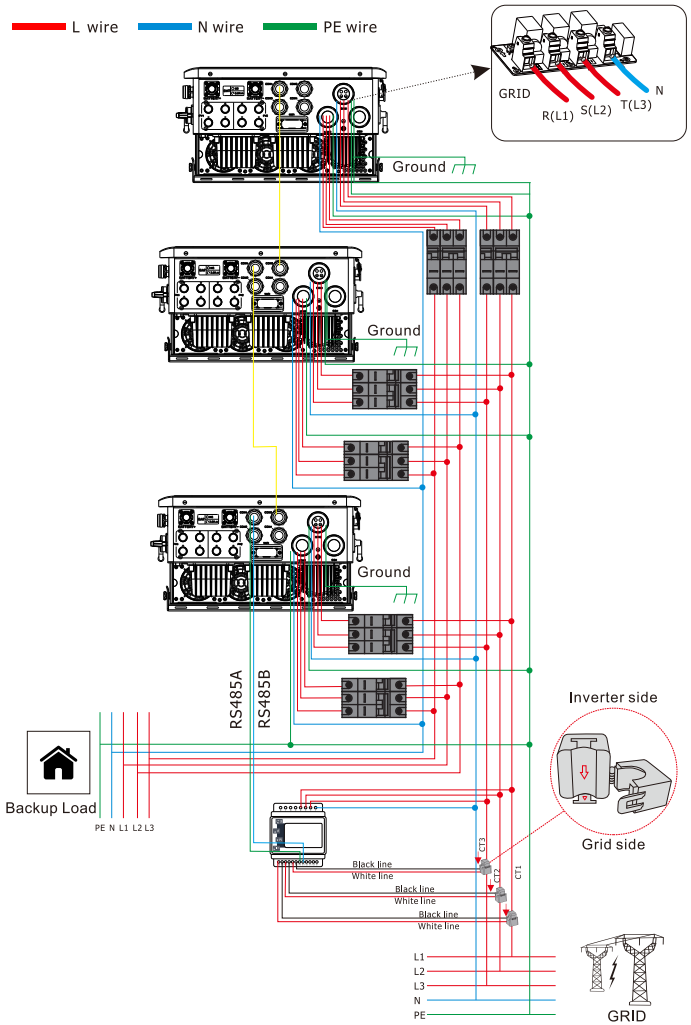

Figure 4.6-10 Smart Meter&CT Connection with Eastron meter

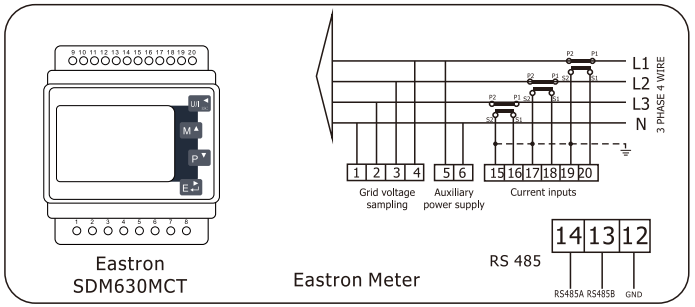

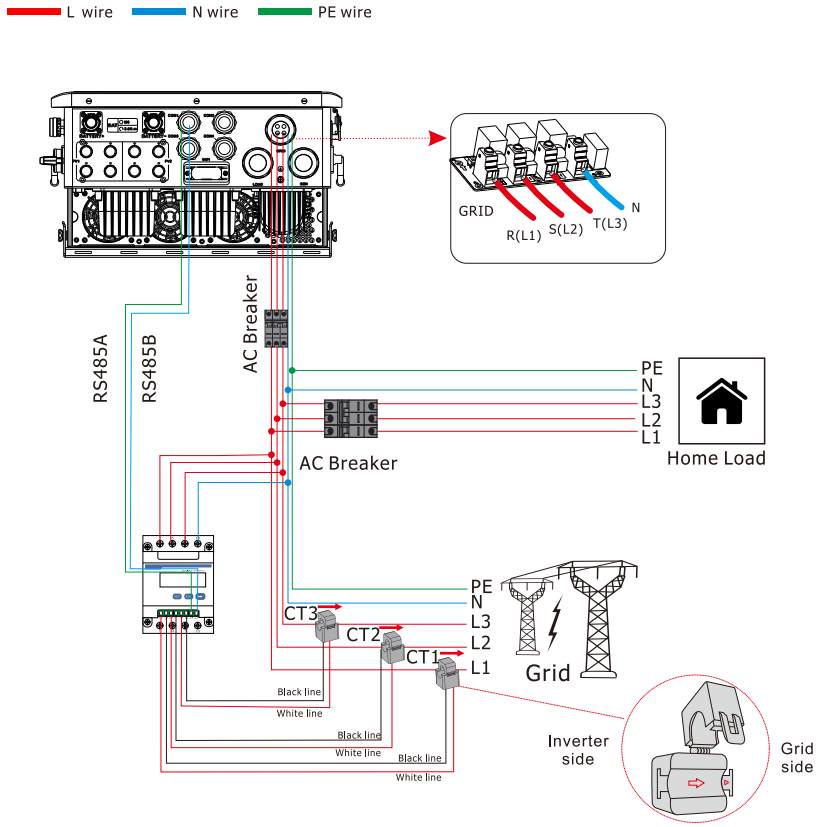

Figure 4.6-11 Smart Meter&CT Connection with CHINT meter

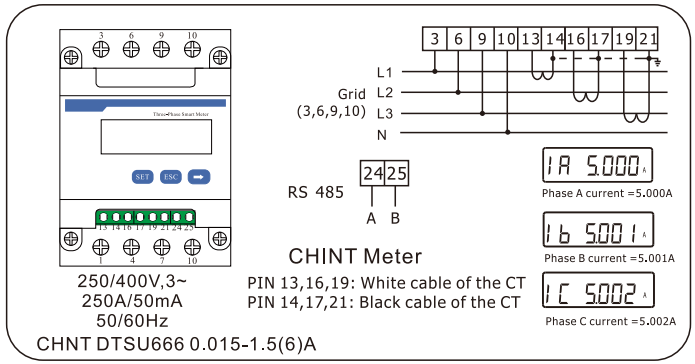

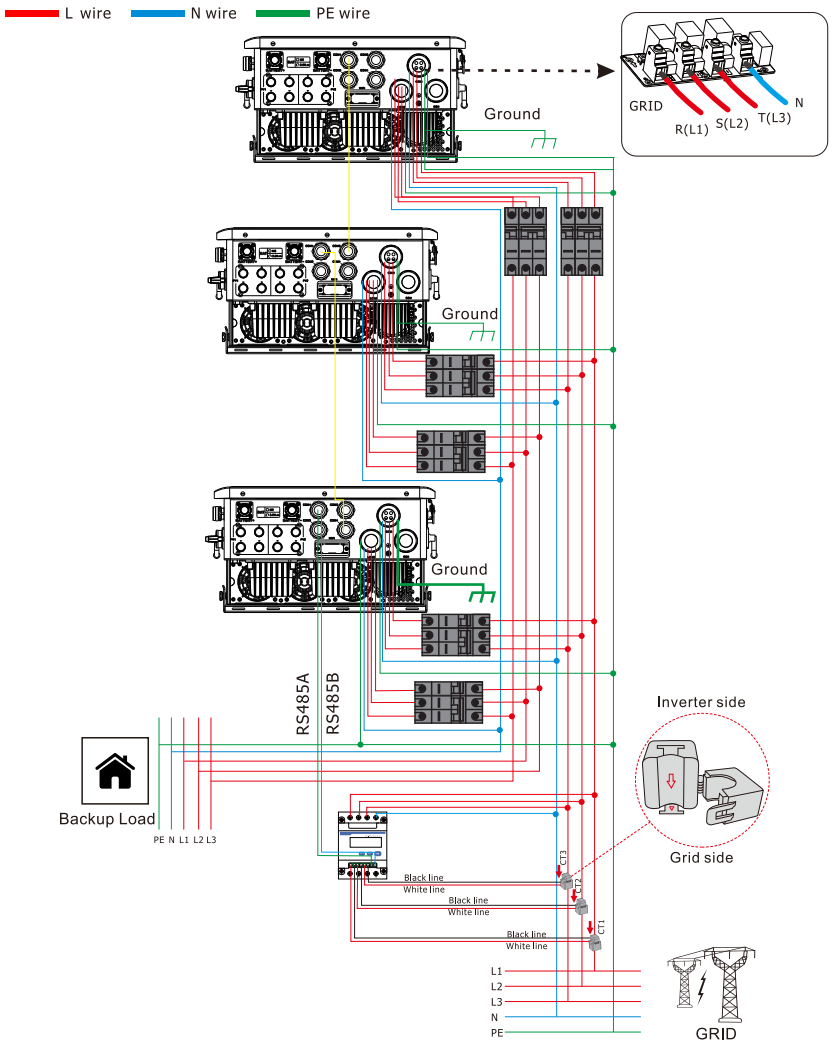

Figure 4.6-11 Smart Meter&CT Connection with CHINT meter

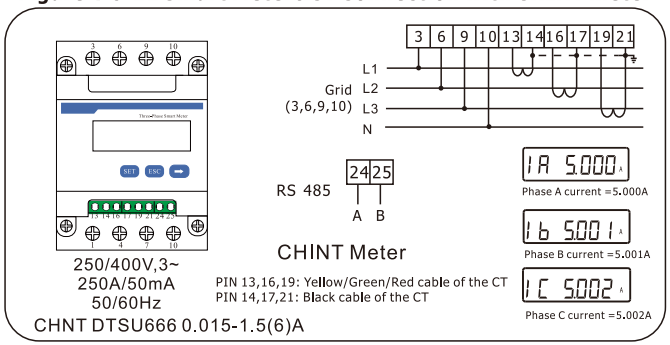

4.7 DRMS Connection

DRMS(Demand Response Modes) is used for Australia and New Zealand and installation (also used as remote shutdown function in European countries), in compliance with Australia and New Zealand safety requirements(or European countries). Inverter integrates control logic and provides an interface for DRMS. The DRMS is not provided by inverter manufacturer. Detailed connection of DRMS & Remote Shutdown are shown below:

Step 1. Open the latch from the right side of the machine. See Figure 4.7-1.

Step 2. Plug out the RJ45 terminal and dismantle the resistor on it. Plug the resistor out, leave the RJ45 terminal for next step.

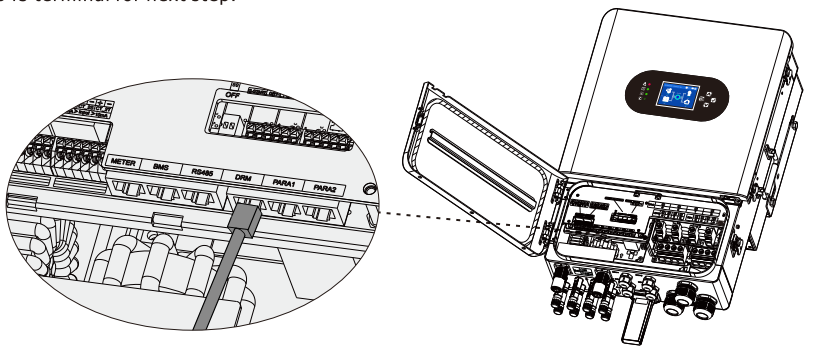

Figure 4.7-1 DRMS interface

WARNING:

•The RJ45 terminal in the inverter has the same function as DRED.

Please leave it in the inverter if no external device is connected.

Step 3-1 Pass the RJ45 cable through the steel plate and connect the DRED cable to the R]45 terminal. As shown in Figure 4.7-2.

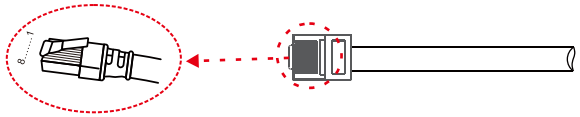

Figure 4.7-2 operating steps

Table 4.7-1 :Port pin allocation table

NO.	1	2	3	4	5	6	7	8
Function	DRM1/5	DRM2/6	DRM3/7	DRM4/8	REF	COM	/	/

Step 3-2 For Remote Shutdown. Run the cable through the steel plate , Then wire from pins 5 and 6. Table 4.7-1 describes the 6-pin port definition,Wiring is shown in Figure 4.7-3

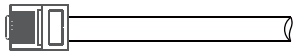

Figure 4.7-3 Remotely close the cable connection

Step 4. Connect RJ45 terminal to the right position onto the inverter.See Figure 4.7-4

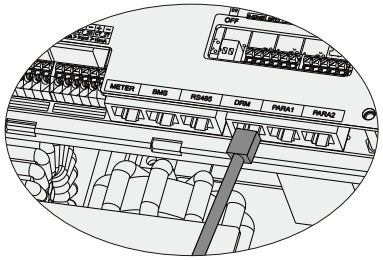

Figure 4.7-4 RJ45 interface

4.8 Lithium Battery Communication

It's allowed to connect lithium battery and build communication only which it has been configured, Please follow bellow steps to configure communication between lithium battery and inverter.
1. Connect power cables between lithium battery and inverter, Please pay attention to the terminals of positive and negative. Make sure the positive terminal of battery is connected to the positive terminal of inverter, and the negative terminal of battery is connected to the negative terminal of inverter.
2. The communication cable is bundled with lithium battery, Both sides are RJ45 port. One port is connected to the BMS port of inverter and another one is connected to the PCSport of lithium battery.

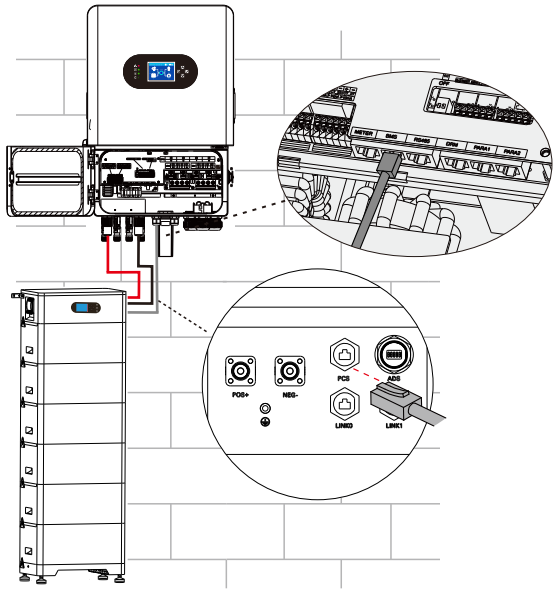

Table 4.8-1 :Detailed Pin Function Of BMS Port On IVGM

Position	Function	
1	/	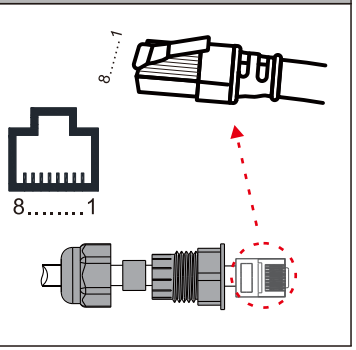
2	/	
3	/	
4	BMS/CANH	
5	BMS/CANL	
6	GND	
7	BMS/485A	
8	BMS/485B	

4.9 Installation of WIFI module

The WiFi communication function applies only to the WiFi module. For details, see Figure 4.9-1 installing a WiFi module.

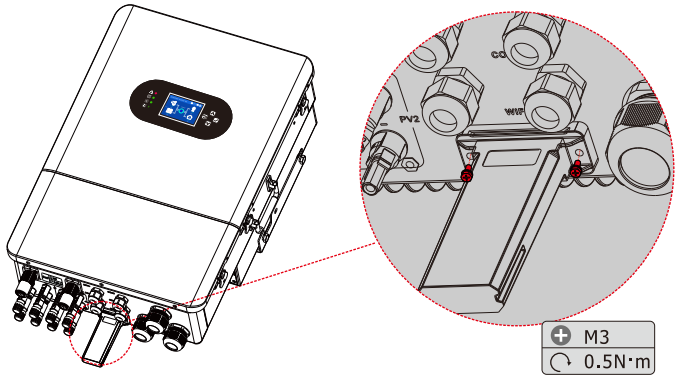

Figure 4.9-1 WiFi Module installation

Table 4.9-1 : WiFi Module installation Table

NO.	1	2	3	4
Function	VCC	GND	WIFI/232RX	WIFI/232TX

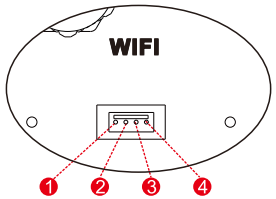

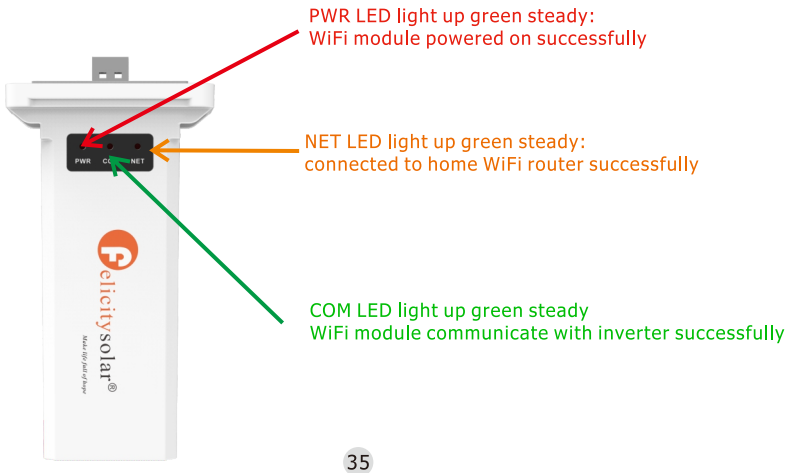

4.10 Wiring diagram with neutral line grounded

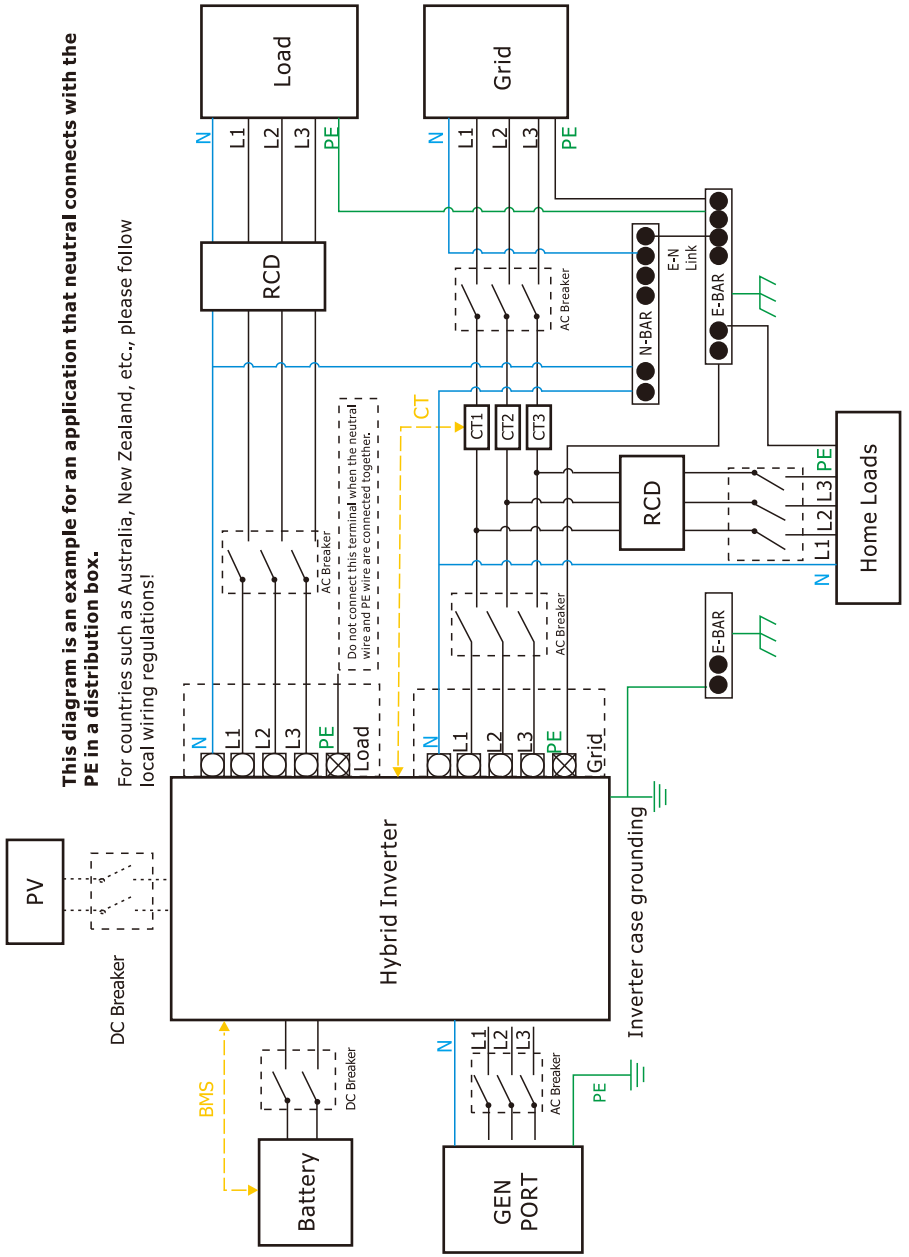

4.11 Wiring diagram with neutral line ungrounded

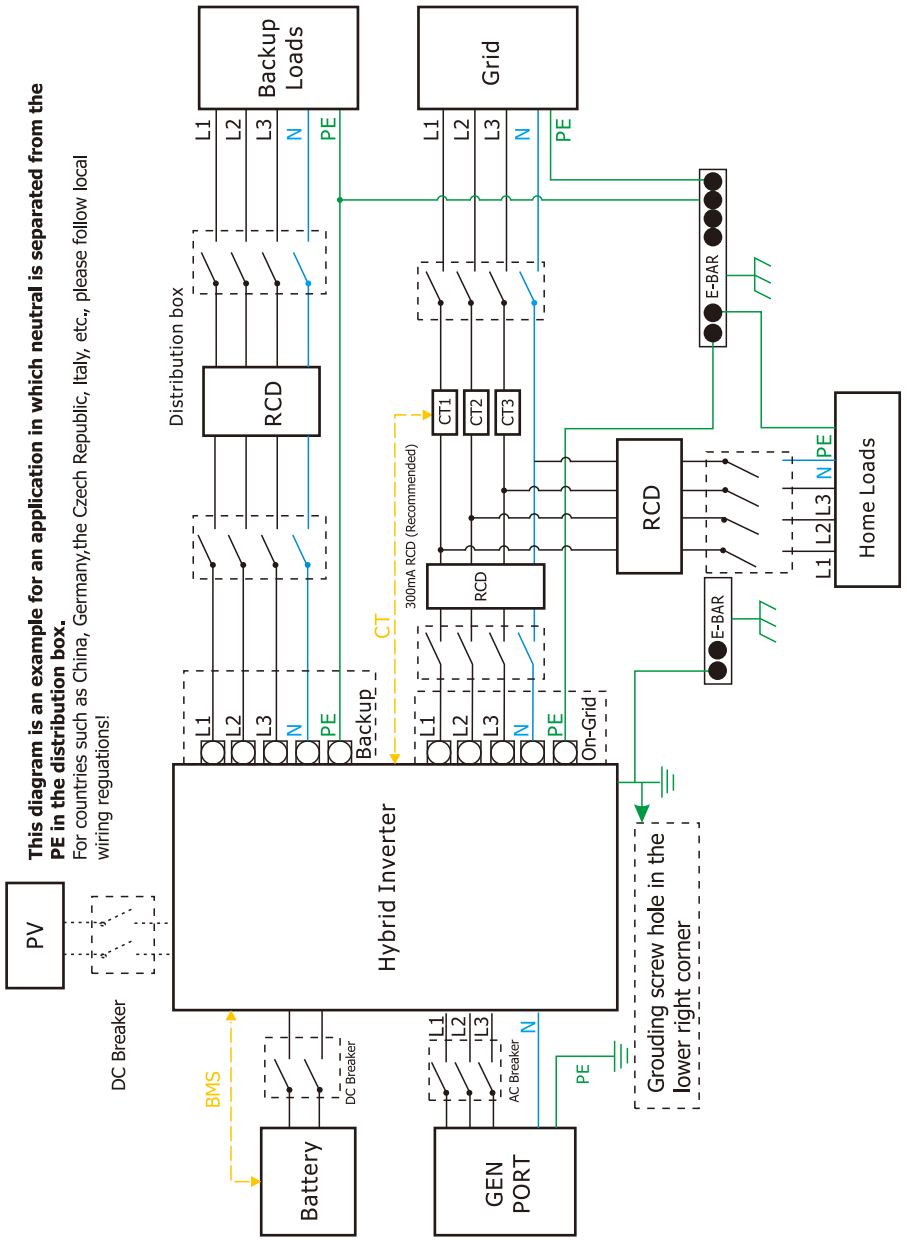

This diagram is an example for an application in which neutral is separated from the PE in the distribution box.
For countries such as China, Germany,the Czech Republic, Italy, etc., please follow local wiring regulations!

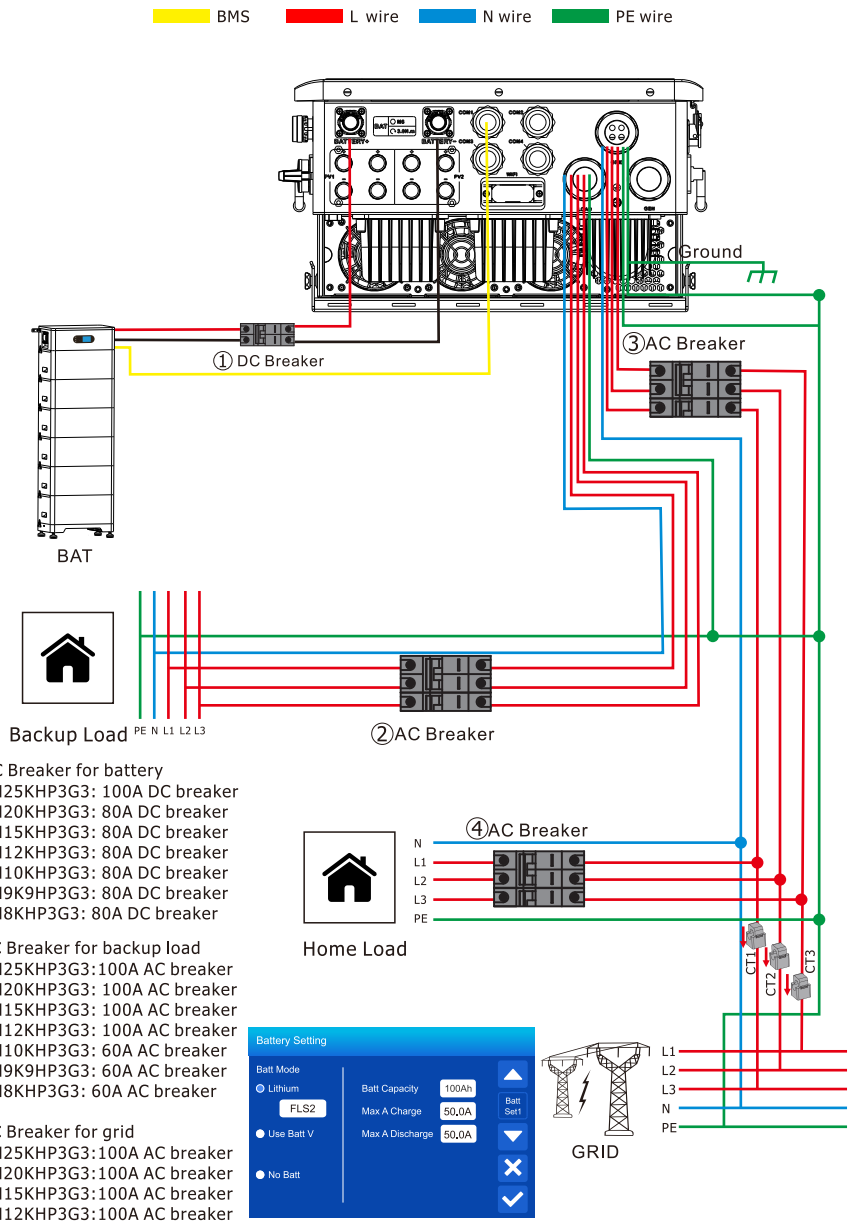

① DC Breaker for battery
IVGM25KHP3G3: 100A DC breaker
IVGM20KHP3G3: 80A DC breaker
IVGM15KHP3G3: 80A DC breaker
IVGM12KHP3G3: 80A DC breaker
IVGM10KHP3G3: 80A DC breaker
IVGM9K9HP3G3: 80A DC breaker
IVGM8KHP3G3: 80A DC breaker

② AC Breaker for backup load
IVGM25KHP3G3:100A AC breaker
IVGM20KHP3G3: 100A AC breaker
IVGM15KHP3G3: 100A AC breaker
IVGM12KHP3G3: 100A AC breaker
IVGM10KHP3G3: 60A AC breaker
IVGM9K9HP3G3: 60A AC breaker
IVGM8KHP3G3: 60A AC breaker

③ AC Breaker for grid
IVGM25KHP3G3:100A AC breaker
IVGM20KHP3G3:100A AC breaker
IVGM15KHP3G3:100A AC breaker
IVGM12KHP3G3:100A AC breaker
IVGM10KHP3G3:60A AC breaker
IVGM9K9HP3G3:60A AC breaker
IVGM8KHP3G3:60A AC breaker

④AC Breaker for home load
Depends on household loads

4.12 Typical Application Diagram of Diesel Generator

BMS L wire N wire PE wire

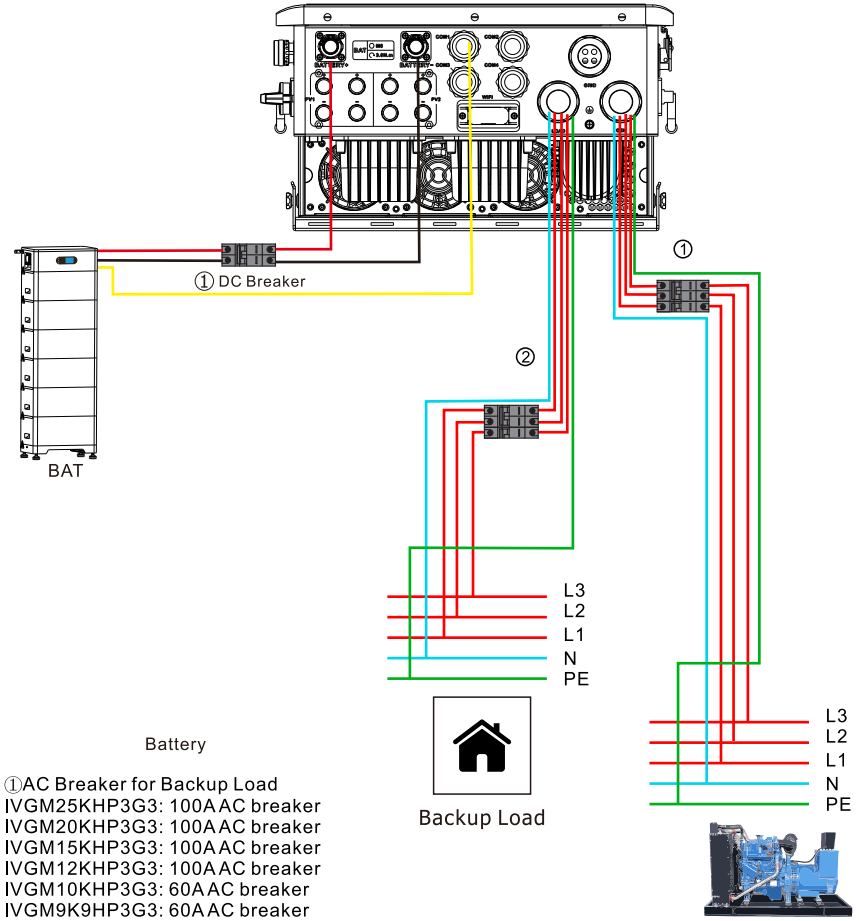

Battery

①AC Breaker for Backup Load
IVGM25KHP3G3: 100A AC breaker
IVGM20KHP3G3: 100A AC breaker
IVGM15KHP3G3: 100A AC breaker
IVGM12KHP3G3: 100A AC breaker
IVGM10KHP3G3: 60A AC breaker
IVGM9K9HP3G3: 60A AC breaker
IVGM8KHP3G3: 60A AC breaker

②AC Breaker for Gen port
IVGM25KHP3G3: 100A AC breaker
IVGM20KHP3G3: 100A AC breaker
IVGM15KHP3G3: 100A AC breaker
IVGM12KHP3G3: 100A AC breaker
IVGM10KHP3G3: 60A AC breaker
IVGM9K9HP3G3: 60A AC breaker
IVGM8KHP3G3: 60A AC breaker

4.13 Three phase parallel connection diagram

Max. 12pcs parallel for on-grid and off-grid operation.
Note: In the parallel system, the power cables for the grid and the load must be identical in length.
Note: In the parallel system, the CTs or meter should be connect to the master.

CAN PARA BMS L wire N wire PE wire

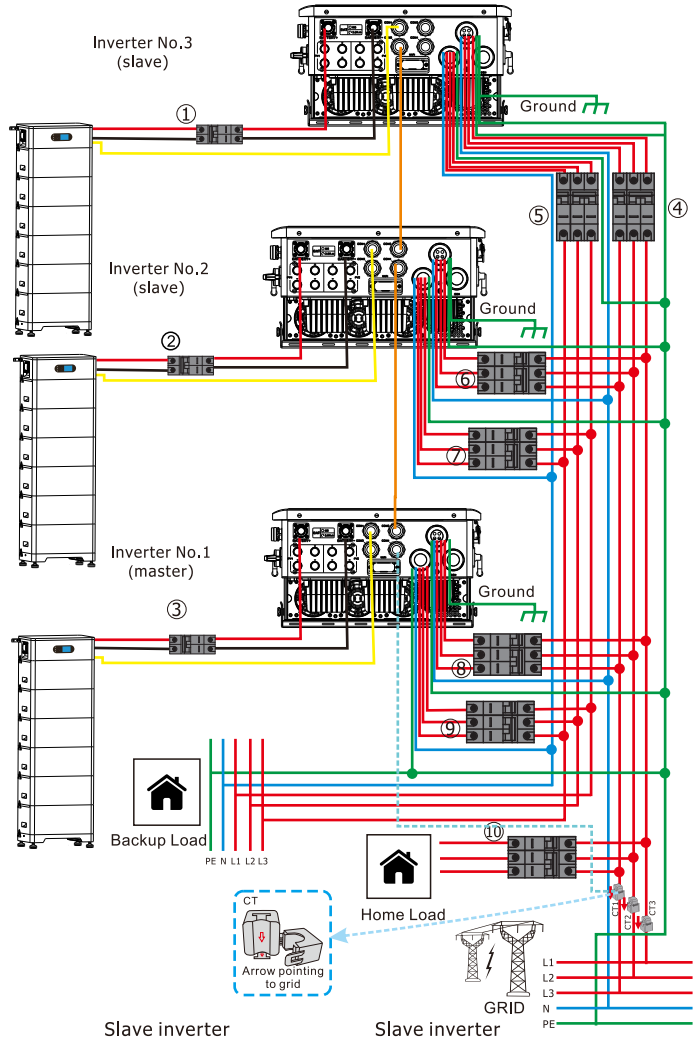

④⑥⑧ AC Breaker for grid port
IVGM25KHP3G3: 100A AC breaker
IVGM20KHP3G3: 100A AC breaker
IVGM15KHP3G3: 100A AC breaker
IVGM12KHP3G3: 100A AC breaker
IVGM10KHP3G3: 60A AC breaker
IVGM9K9HP3G3: 60A AC breaker
IVGM8KHP3G3: 60A AC breaker

⑤⑦⑨ AC Breaker for backup load
IVGM25KHP3G3: 100A AC breaker
IVGM20KHP3G3: 100A AC breaker
IVGM15KHP3G3: 100A AC breaker
IVGM12KHP3G3: 100A AC breaker
IVGM10KHP3G3: 60A AC breaker
IVGM9K9HP3G3: 60A AC breaker
IVGM8KHP3G3: 60A AC breaker

①②③ DC Breaker for battery
IVGM25KHP3G3:100A DC breaker
IVGM20KHP3G3:80A DC breaker
IVGM15KHP3G3:80A DC breaker
IVGM12KHP3G3:80A DC breaker
IVGM10KHP3G3:80A DC breaker
IVGM9K9HP3G3:80A DC breaker
IVGM8KHP3G3:80A DC breaker

⑩AC Breaker for home load
Depends on household loads

Master inverter Slave inverter Slave inverter

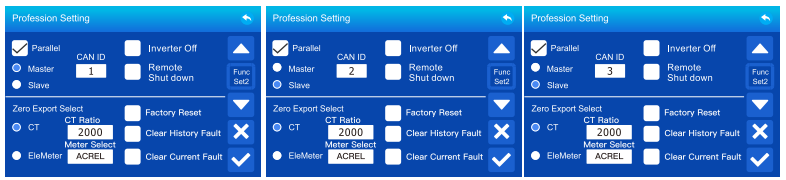

5.Display and operation

This chapter describes the panel displaying and how to operate on the panel, which involves the LCD display, LED indicators and operation panel.

5.1 Inverter Startup and Commissioning

WARNING:
TURN ON the inverter with at least one of the following power sources:
1) Battery, 2) PV or 3) Grid/Generator

1. Voltage of the battery must be between 160VDC - 700VDC.
2. **Turn ON** battery modules and ensure appropriate voltage on each battery. Verify nominal voltage of battery bank according to the battery installation manual.
3. **Turn ON** the ON/OFF button (located on the left side of the inverter).
4. **DO NOT** reverse polarity. **DO NOT Turn OFF** battery disconnect if any current is flowing in or out of the battery.

5.1.2 Verify the PV Input

1. Input voltage must not exceed 1,000VDC.
2. Input voltage must be above the startup voltage of 150VDC.
3. Do not ground PV+ or PV-.
4. Verify polarity in each PV string. Backward polarity will measure 0Vdc by the IVGM INVERTER and will cause long term damage.
5. PV alone turns LCD screen. Inverter requires grid and/or batteries to operate, otherwise an "Turn OFF" message will appear.
6. PV DC disconnect switches on the left side of the inverter turn the PV ON.

5.1.3 Verify the GRID Input

1. Verify that voltage between Neutral and Ground is 0VAC.
2. Verify that voltage between "GRID" L1 and "LOAD" L1 is 0V. Do the same for L2 and L3.
3. Verify the AC voltage on the "GRID" terminals using digital multimeter.

5.1.4 Power ON the Inverter | Single Inverter Systems

1. **Turn ON** the external "GRID" breaker, Wait for the "**GRID**" LED indicator to turn on.
2. **Turn On** the battery breaker if the system has connected the batteries. Wait for the "BATTERY" LED indicator to turn on.
3. PRESS down the ON/OFF button to the **ON** position, Wait for the "**DC/AC**" LED indicator to turn on, This may take a few minutes.
4. **Turn ON** the PV switch to allowed PV connection.
5. **Turn ON** any external **"LOAD"** and **"GEN"** breakers.

When a system connected to either PV or Grid (without battery) is switched on, the LCD will still be lighted up displaying "Turn OFF", In this situation, after switching ON/OFF button on, select "No batt" at the inverter settings to make the system work.

When turning off the inverter, please follow the following steps:
1. Turn off the AC breakers on Grid port, Load port and GEN port.
2. Press the ON/OFF button of hybrid inverter and turn off the DC breaker on battery side, then turn off the power button of the battery.
3. Switch Off the PV switches of the inverter.

5.2 Operation and Display Panel

Once the unit has been properly installed and the batteries are connected well, simply press ON/OFF button to turn on the unit. When system without battery connected, but connect with either PV or grid, and ON/OFF button is switched off, LCD will still light up (Display will show OFF), In this condition, when switch on ON/OFF button and select NO battery, system can still working.



Table 5.2-1 LED indicators

Number	LED Indicator		Messages
1	Fault	Red led solid light	Malfunction or warning
2	DC/AC	Green led solid light	Inverter operating normal
3	GRID	Green led solid light	Grid connection normal
4	BATTERY	Green led solid light	Battery connection normal

Table5.2-2 Function Buttons

Number	Function Key	Description
5	Esc	To exit setting mode
6	Up	To go to previous setting page/Add
7	Down	To go to next setting page/Subtract
8	Enter	To confirm the settings

Button Instructions:As shown in Figure 5.2-1.Press the Up key(or click①)can go to the previous setting page.Press the Down key(or click②)can go to the next setting page.If want to set The MAX Charge current number,click⑤ then press the Up/Down key to Add/Subtract the number,press the Enter key(or click④) to confirm the number.Press the Esc key(or click③)to exit setting mode.

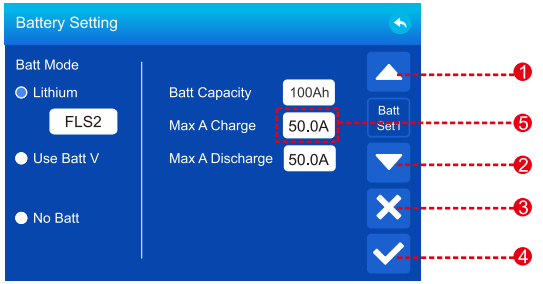

Figure 5.2-1 Battery Setting

1.The icon in the center of the home screen indicates that the system is in normal operation. If the icon changes to "Turn OFF" and flashes in red, it means there is a communication error or other errors with the inverter. For detailed error information, you can check the system alarm menu.
2.At the top of the screen is the time.
3. System Setup Icon, Press this set button, you can enter into the system setup screen which including Battery Setting, Grid Setting, Generator Setting, Work Mode Setting, Profession Setting, Basic Setting, Alarm Info.
4. The main screen showing the info including Solar, Grid, Load and Battery. Its also displaying the energy flow direction by arrow.

PV Power always keep positive.
Grid power negative means sell to grid, positive means get from grid.
Battery power positive means charge,negative means discharge.

5.3 Solar Power Curve



This is Solar Panel detail page.

① Solar Panel Generation.
② Voltage, Current, Power, state for each MPPT.
③ Daily and total PV production.

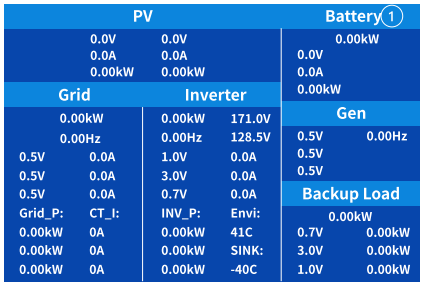

This is Inverter detail page.

① DC/AC inverter module
Voltage, Current, Power for each Phase.
SINK: mean Heat-sink temperature.

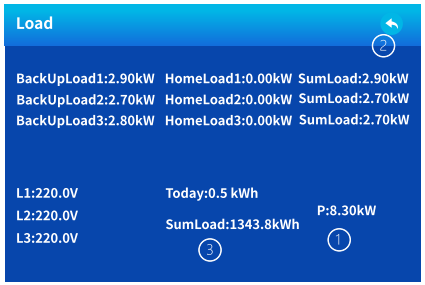

This is Back-up Load detail page.

① Back-up Power.
② Voltage, Power for each Phase.
③ Daily and total backup consumption.



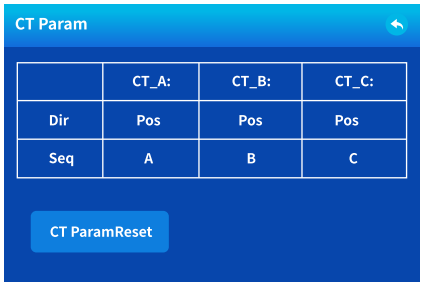

This is Grid detail page.

① L: Voltage for each Phase
CT: Power detected by the external current sensors.
LD: Power detected using internal sensors on AC grid in/out breaker.
② BUY: Energy from Grid to Inverter.
SELL: Energy from Inverter to grid.
③Press the "CT Param" button will enter into the CT params page. Press the "CT Param Reset" button will restore the normal Grid sequence.

5.4 Basic Setting

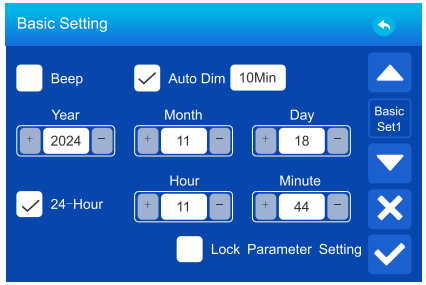

Beep: Used to turn on or off the beep sound in inverter's alarm status.
Auto Dim: Enable LCD dimming time: 1-10 min; Disable to keep screen on permanently.
Lock Parameter Setting: Enabel lock parameter setting.

5.5 Battery Setting

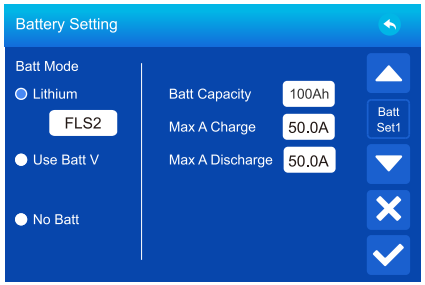

Batt Capacity: Reserved.
Lithium Mode: This is the BMS communication protocol code which can be confirmed on the "Felicitysolar Approved Battery list" based on the battery model you are using.
Use Batt V: Use battery voltage for all battery related settings.
No Batt: tick this item if no battery is connected to the system.When the battery is not connected, the 25K inverter will only operate when both the PV and the power grid are connected simultaneously
Max A Charge/ Discharge: Max battery charge/discharge current(0-50A for 8/9.9/10/12/15/20/25kW model)

- For AGM and Flooded, we recommend Ah battery size ×20%=Charge/Discharge amps.
- For Lithium, we recommend Ah battery size ×50%=Charge/Discharge amps.
- For Gel, follow manufacturer's instructions.

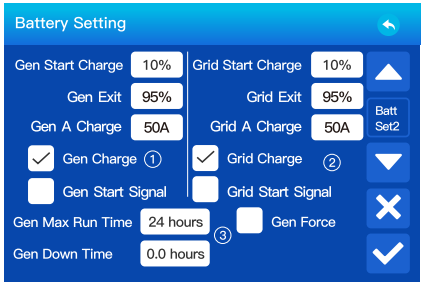

This is Gen Charge Setup page. ①②
Gen Start Charge =10%: When battery SOC or voltage drop to this set value, system will Auto Start a connected generator to charge the battery bank.
Gen Exit =95%: When battery SOC or voltage raise to this set value, system will Auto Break generator.
Gen A Charge= 50A: The Battery charging current that the generator will support.
Gen Charge: Use the power of diesel generator to charge the battery.
Gen Start Signal : The normally open relay will close when tick this item.
Gen Max Run Time: It indicates the longest time. Generator can run in one time, when time is up, the Generator will be turned off. 24H means that it does not shut down all the time.
Gen Down Time: It indicates the rest time of the Generator before the inverter restart it again.

This is Grid Charge Set up, you need select. ③
Grid Start Charge =10%: When battery SOC or voltage drop to this set value, inverter will start the Grid Start Signal connected to the grid port automatically to charge the battery.
Grid Exit=95%: When battery SOC or voltage raise to this set value, inverter will not charge the battery.
Grid A Charge=50A: maximum charging current when only use the power fed from the grid port of inverter as the power source, which means using the power of grid or the power of generator connected to the grid port.
Grid Charge: It's allowed to use power fed from the grid port, which includes grid or generator connected to the grid port, to charge the battery.
Grid Start Signal : When a generator is connected to the grid port of hybrid inverter, this 'Grid Start Signal' can be used to control the dry contact to start or stop the generator.

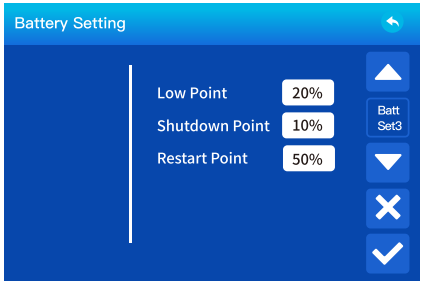

Float voltage: Only Batt Mode select "Use Batt V", this item can show.
Low Point: Be valid in On-grid mode, The energy of the battery is not allowed to be lower than this value.
Shutdown Point : Be valid in Off-grid mode, battery can discharge to this value, then the DC/AC inverter module of this inverter will be shut down and the solar power can only be used to charge the battery.
Restart Point: Be valid in Off-grid mode, after the DC/AC inverter module of this inverter is shut down, the PV power can only be used to charge the battery. After the battery value has resumed to this "Restart" value, the inverter module will restart to output AC power.

5.6 Work Mode Setting

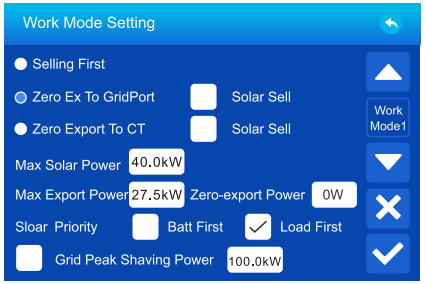

Work Mode Setting:
Selling First: This Mode allows hybrid inverter to sell back any excess power produced by the solar panels to the grid. If Time Of Use is active, the battery energy also can be sold into grid.
The PV energy will be used to power the load and charge the battery and then excess energy will flow to grid.
Power source priority for the load is as follows:
1. Solar Panels.
2. Grid. when Solar Priority tick Batt First
Batteries (until programable SOC discharge is reached). when Solar Priority tick Load First
Max Solar Power: The maximum PV input power allowed.
Zero Export To Grid Port: Hybrid inverter will only provide power to the backup load connected. The hybrid inverter will neither provide power to the home load nor sell power to grid. The built-in CT will detect power flowing back to the Grid Port and will reduce the power of the inverter only to supply the backup load and charge the battery.

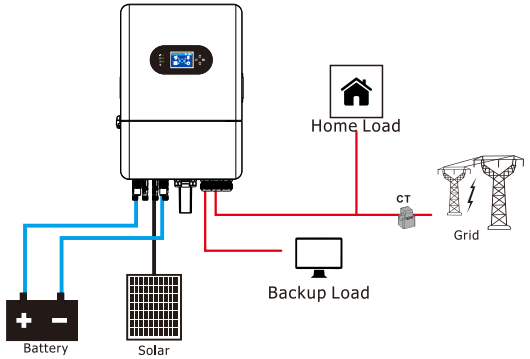

Zero Export To CT: Hybrid inverter will not only provide power to the backup load connected but also give power to the home load connected. If PV power and battery power is insufficient, it will take grid energy as supplement. The hybrid inverter will not sell power to grid. In this mode, a CT or Meter is needed. The external CT will detect power flowing back to the grid and will reduce the power of the inverter only to supply the backup load, charge battery and home load.

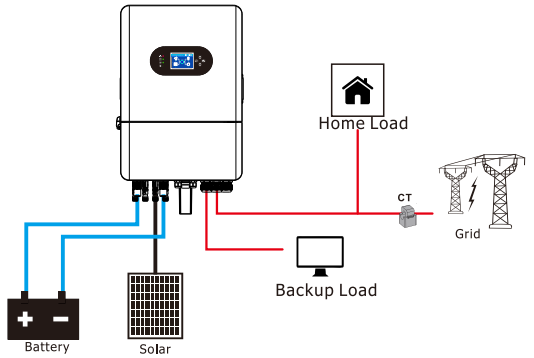

Solar Sell: "Solar sell" is supplement for Zero Export To Grid Port or Zero Export To CT: when this item is active, the surplus PV energy can be sold back to grid too. When it is active, PV Power source priority usage is as follows: load consumption and charge battery and feed into grid.
Max Export Power: Allowed the maximum output power to flow to grid.

Zero-export Power: for Zero Export To Grid Port or Zero Export To CT, and the "Solar sell" is not active. It tells the grid output power threshold to ensure the hybrid inverter won't feed power to grid. Recommend to set it as 20-100W to ensure the hybrid inverter won't feed power to grid. E.g., if the inverter feeds 50W to the grid, set as -50W to prevent power from flowing to the grid. If the grid feeds 50W to the inverter, set as 50W to prevent power from flowing into the inverter.

Solar Priority: Priority of PV power usage.
Batt First: PV power is firstly used to charge the battery and then used to power the load. If PV power is insufficient, grid will make supplement for battery and load simultaneously.

Load First: PV power is first used to drive the load, and then used to charge the battery. If PV power is insufficient, both PV and battery will supply power to the load together. If both PV and battery still cannot meet the load demand, PV, battery, and grid will supply power to the load together.

Grid Peak Shaving Power: When it is active, grid power will be limited within the set value and the Battery will not sell to grid. If the grid peak-shaving power plus PV power plus maximum battery power cannot meet the power consumption of the load after peak-shaving. The grid peak-shaving will be invalid,and the power taken from the grid can exceed this set value.(When The Grid Peak Shaving Power is active,The TOU mode will be activated.If want to turn off the TOU mode,must turn off Grid Peak Shaving Power first.)

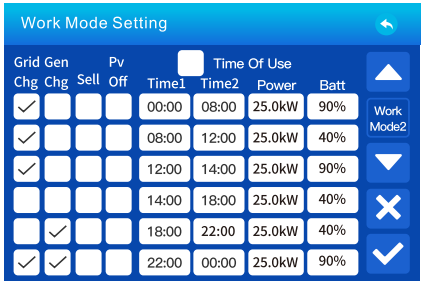

Time Of Use: it is used to program when to use grid or generator to charge the battery, and when to discharge the battery to power the load. Only tick "Time Of Use" then the follow items (Grid, charge, time, power etc.) will take effect.
Note: If tick"Time of use "and "Sell", The energy exceeding the battery target value and the energy from PV will be used to supply the load and feed into the power grid, If the battery energy is lower than the target value, only the energy from PV will be used to supply the load and the grid.(The"Sell" have priority over "Solar Sell"and "Grid Peak Shaving Power")
Charge Source:select grid or diesel generator to charge the battery.
Grid: use grid to charge the battery in a time period.
Gen: use diesel generator to charge the battery in a time period.
Note: if tick Grid and Gen at the same time, Grid is priority. and only the Gen Charge Enable or Grid Charge Enable is tick in Battery Setting, can the corresponding Gen or Grid tick take effect.
Time: real time, range of 00:00-24:00.

Power: discharge power of a single battery only , or total discharge power of the two batteries allowed.
Batt(V or SOC %): The target value of battery voltage or SOC during the current time period, If the actual SOC or voltage of the battery is lower than the target value, the battery needs to be charged. If there is a energy source like solar power or grid, the battery will be charged; If the actual SOC or voltage of the battery is higher than the target value, the battery can discharge, and when the solar power is not enough to power the load or the "Selling First "is enabled, the battery will discharge. Assuming that at the end of the previous time period, the actual battery level reaches or approaches the target value of the previous time period.

Power: discharge power of (battery) allowed.
Batt(V or SOC %): battery SOC % or voltage setting value.

For example: (as shown on Figure 5.7-1 TOU mode)

1)During 00:00-08:00, Grid charge is ticked.
if battery SOC is lower than 90%, it will use grid to charge the battery until battery SOC reaches 90%. The charging current value of the battery is "Grid A charge"
2)During 08:00-12:00, Grid charge is ticked.
if battery SOC is higher than 40%, hybrid inverter will discharge the battery until the SOC reaches 40%. If battery SOC is lower than 40%, then grid will charge the battery SOC to 40%.
3)During 12:00-14:00, Grid charge is ticked.
if battery SOC is lower than 90%, it will use grid to charge the battery until battery SOC reaches 90%.
4)During 14:00-18:00,
when battery SOC is higher than 40%, hybrid inverter will discharge the battery until the SOC reaches 40%.if battery SOC is lower than 40%, neither the diesel generator nor the grid will charge the battery.

5)During 18:00-22:00,
when battery SOC is higher than 40%, hybrid inverter will discharge the battery until the SOC reaches 40%.If battery SOC is lower than 40%, then diesel generator will charge the battery SOC to 40%.
6)During 22:00-00:00, Grid charge is ticked.
if battery SOC is lower than 90%, it will use grid or diesel generator to charge the battery until battery SOC reaches 90%.

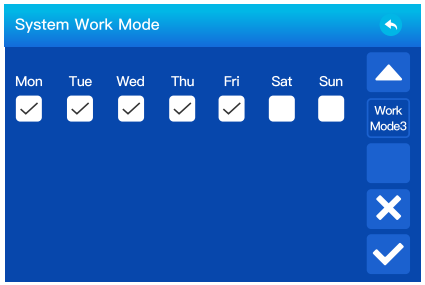

It allows users to choose which day to execute the setting of "Time Of Use".
For example, the inverter will execute the time of use page on Mon/Tue/Wed/Thu/Fri only.

5.7 Grid Setting

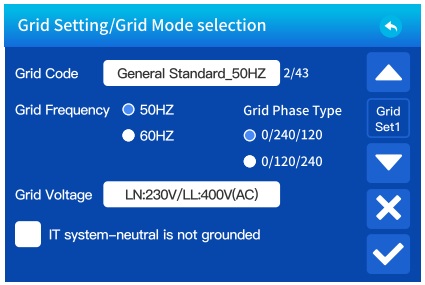

Grid Code:
0: Germany_VDE4105,
1: Warehouse,
2: General Standard_50Hz,
3: General Standard_60Hz,
4: Italy_CEI_021_2019,
5: Britain_G99,
6: Australia_A,
7: NewZealand_AS4777,
8: SouthAfrican_NRS097,
9: Netherland_EN 50549-1,
10: Brazil,
11: EN50549,
12: Poland_NC_RFG,
13: Czech_CSN 50549-1,
14: Austria_R25:2020-03,
15: Austria_OVE-directive_R25,
16: Spain_NTS_2021,
17: Spain_UNE217001,
18: cNetherland,
19: Australia_B,
20: Australia_C,
21: Australia_AS 4777.2,
22: UL1741 &IEEE1547,
23: CPUC RULE21,
24: SRD-UL-1741,
25: Britain_G98,
26: EN50549 1_Norway_133V,
27: EN50549_1_Norway_230V,
28: Japan_200VAC_3P3W,
29: Japan_400VAC_3P3W,
30: Japan_415VAC_3P4W,
31: EN50549_CZ-PPDS(>16A),
32: EN50549_CZ_PPDS_L16A,
33: EN50549_1_Switzerland,
34: EN50549 1_GR,
35: EN50549 1_Poland,
36: CEI_0_21_External,
37: CEI_0_21_Areti,
38: CEI_0_16_IT,
39: NI_G98
40: NI_G99
41: ESB Networks(Ireland)
42: Belgium_C10
43: Belgium_C11

Grid Phase Type:Grid Phase Sequence Type
Grid Voltage: Inverter output voltage levels are LN: 110V/LL: 190.5V (AC) to LN: 277V/LL: 480V (AC).

IT system: If the grid system is IT system, then please enable this option. All the live lines of IT system are insulated from ground, and the neutral point of the IT system is grounded through high impedance or not grounded.

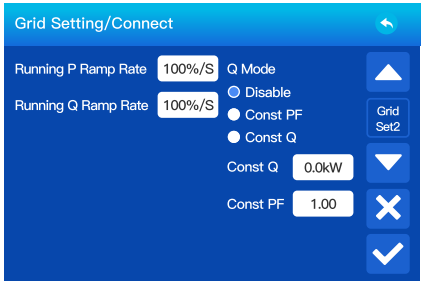

Running P Ramp Rate: It is the power ramp response to the active power reference in normal running.
Running Q Ramp Rate: It is the power ramp response to the Reactive power reference in normal running.

Const Q: setting the reactive power value. Const Q >0 means Inverter output Inductive reactive power, Const Q <0 means Inverter output capacitive reactive power.
Const PF: setting the power factor(cos p) value, Const PF>0 means Inverter output inductive power (cause the grid voltage to rise),Const PF<0 means Inverter output capactive power(cause the grid voltage to reduce).

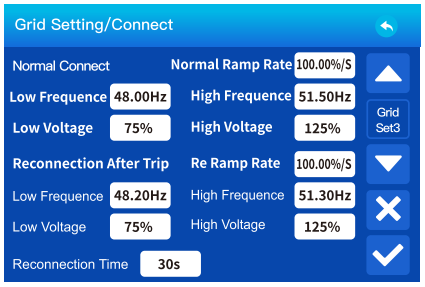

Normal connect: The allowed grid voltage/frequency range when the inverter operates normally.
Normal Ramp rate: It is the startup power ramp.
Reconnect after trip: The allowed grid voltage/frequency range for the inverter connects the grid after the inverter trip from the grid.
Reconnect Ramp rate: It is the reconnection power ramp.
Reconnection time: The waiting time for the inverter connects the grid again after tripping.

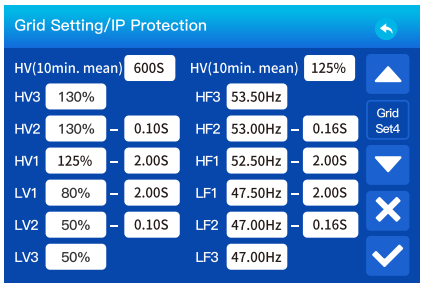

HV(10min.mean): If the average grid voltage exceeds the set value within 10 minutes, the inverter will report an overvoltage fault.
HV1: Level 1 overvoltage protection point;,
HV2: Level 2 overvoltage protection point;
HV3: Level 3 overvoltage protection point.

LV1: Level 1 undervoltage protection point;
LV2: Level 2 undervoltage protection point;
LV3: Level 3 undervoltage protection point.

HF1: Level l over frequency protection point;
HF2: Level2 over frequency protection point;
HF3: Level 3 over frequency protection point.

LF1: Level l under frequency protection point;
LF2: Level2 under frequency protection point;
LF3: Level 3 under frequency protection point.

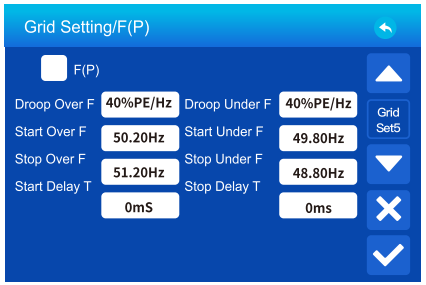

F(P): It's used to adjust the output active power of inverter according to the grid frequency.
Droop F: percentage of nominal power per Hz
For example, "Start freq F=50.2Hz, Stop freq F=51.2Hz.
Droop F=40%PE/Hz" when the grid frequency reaches 51.2Hz, the inverter will decrease its active power at Droop F of 40%. And then when grid system frequency is less than 50.2Hz, the inverter will stop decreasing output power. For the detailed setup values, please follow the local grid code.

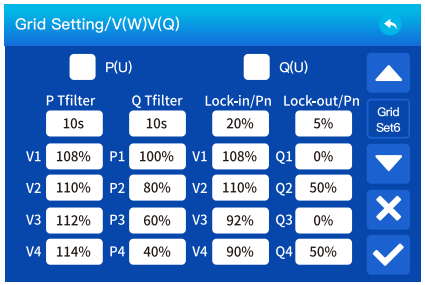

P(U): It is used to adjust the inverter's active power according to the set grid voltage.
Q(U): It is used to adjust the inverter's reactive power according to the set grid voltage.These two functions are used to adjust inverter's output power (active power and reactive power) when grid voltage changes.
Lock-out/Pn 5%: When the inverter active power is less than 5% rated power, the V(Q) mode will not take effect.
Lock-in/Pn 20%: If the inverter active power is increasing from 5% to 20% rated power, the V(Q) mode will take effect again.

For example: V2=110%, P2=80%. When the grid voltage reaches 110% of the rated grid voltage, inverter will reduce its active power output to 80% of the rated power.
For example: V2=110%, Q2=50%. When the grid voltage reaches 110% of the rated grid voltage inverter will output reactive power that accounts for 50% of the rated power. For the detailed setup values, please follow the local grid code.

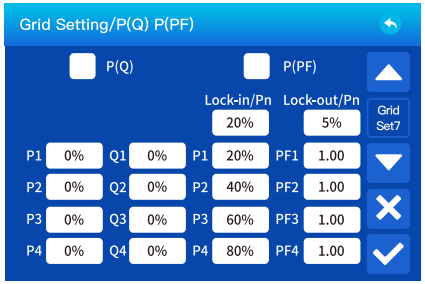

P(Q): it is used to adjust the output reactive power of inverter according to the set active power.
P(PF): It is used to adjust the PF of inverter according to the set active power.For the detailed setup values, please follow the local grid code.
Lock-out/Pn 5%: When the output active power of inverter is less than 5% of inverter's rated power, it won't enter the P(PF) mode.
Lock-in/Pn 20%: When the output active power of inverter is higher than 20% of inverter's rated power, it will enter the P(PF) mode.

Note : only when the grid voltage is equal to or higher than 1.05 times of the rated grid voltage, then the P(PF)mode will take effect.

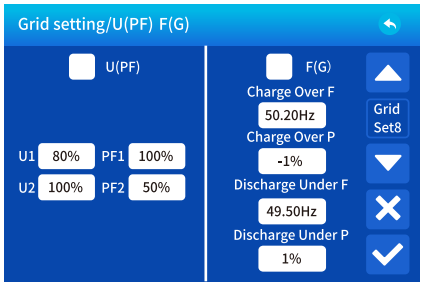

U(PF): It's used to adjust the output power factor of inverter according to the grid voltage.
F(G): It's used to adjust the power of Grid to charge/discharge the battery according to the grid frequency.
U1 80%/PF1 100%:-1% It means when the grid voltage is increase from 80% to U2 of the rated grid voltage, the power factor of inverter will decrease from 100% to Pf2.
Charge Over F:50.2Hz/Charge Over P:-1% It means when the battery is charging, if the grid frequency is more than 50.2Hz, the battery will be discharged with the 1% of inverter's rated power.

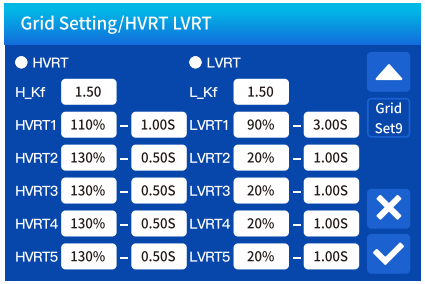

Reserved: This function is reserved.It is not recommended.

5.8 Generator Setting

The GEN port can be connected to Generator, Smart Load, or Micro-Inverter.

When connected to Generator, the following settings can be configured.

GEN Connect to Grid: connect the diesel generator to the grid input port.If this option is checked, the system will show that it is running in OnGrid status, but it will actually operate as an diesel generator and not allow energy to flow into the diesel generator. Meanwhile, the protection parameters also operate in accordance with the protection parameters of the diesel generator.

Generator input rated power: allowed Max. power from diesel generator.

Gen Peak shaving: Limit the maximum output power of the generator to the set generator input rated power on "GEN Port Setting" page, the rest of power consumption will be provided by inverter to ensure that the generator will not overload.

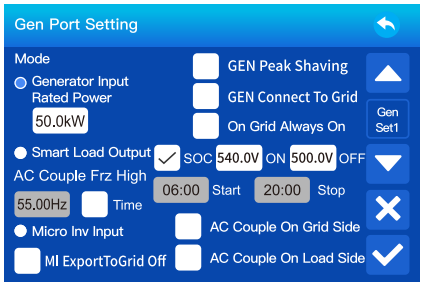

HV1: Level 1 overvoltage protection point and protection time;
HV2: Level 2 overvoltage protection point and protection time;
LV1: Level 1 undervoltage protection point and protection time;
LV2: Level 2 undervoltage protection point and protection time;
HF1: Level 1 over frequency protection point and protection time;
HF2: Level 2 over frequency protection point and protection time;
LF1: Level 1 under frequency protection point and protection time;
LF2: Level 2 under frequency protection point and protection time.

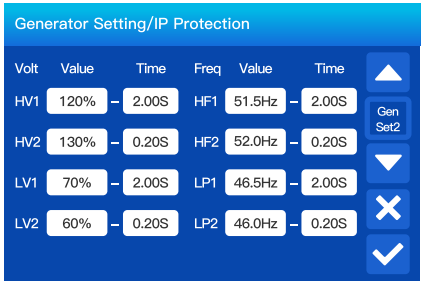

When connected to Smart Load, the following settings can be configured.

Smart Load Output: Use the GEN port as an AC output port, and the load connected to this port canbe controlled on/off by the hybrid inverter.

e.g.ON: 90%,0FF: 80%: When the battery bank SOC reaches 90%, Smart Load Port will switch on automatically and power the load connected. when the battery bank SOC < 80% , the Smart Load Port will switch off automatically.

Time: It means the inverter will run specific condition from 08:00 to 20:00.

On Grid always on: When "on Grid always on" is checked, the smart load port will always keep switching on if hybrid inverter is operating in on-grid mode.

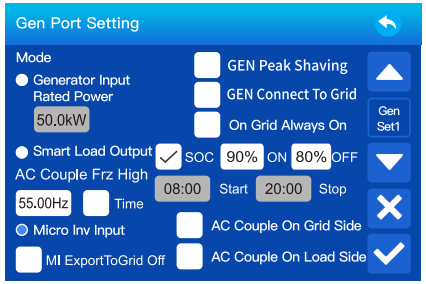

When connected to Micro-Inverter, the following settings can be configured.

Micro inv input: Use the GEN port as an AC couple input port which can be connected with micro-inverter or other Grid-Tied inverter.

*** Micro inv Input ON:** When the hybrid inverter operates in off-grid mode and the SOC or voltage of battery drops to this set value,the relays on GEN port of hybrid inverter will turn to normally closed(ON), then the Grid-Tied inverter will generate solar power and feed into hybrid inverter. When the hybrid inverter operates in on-grid mode, this parameter will be invalid, the relays on GEN port of hybrid inverter will always be normally colsed(ON), Grid-Tied inverter can operate normally.

AC Couple Frz High: If choosing"Micro Inv input", as the battery SOC reaches gradually setting value (OFF), during the process, the microinverter output power will decrease linear. When the battery SOC equals to the setting value (OFF), the system freguency will become the setting value(AC couple Frz high) and the Microinverter will stop working.

MI export to Grid off: Stop exporting power produced by the microinverter or Grid Tied inverter to the grid.

AC Couple on Grid port: Reserved

AC Couple on Load port: Use the Load port as an Ac couple input port, which can be connected with micro-inverter or other Grid-Tied inverter.

5.9 Profession Setting

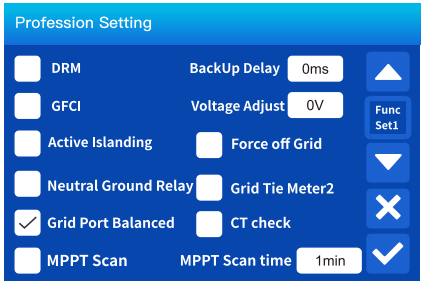

DRM: For AS4777 standard.
Backup Delay: When the grid cuts off, the inverter will output power after the set time.
For example, backup delay: 600s. the inverter will give output power after 600s when the grid cuts off.
GFCI: the ground-fault circuit interrupter function.
Active Islanding: Active islanding detection enable or not.
Voltage Adjust: if the inverter is working at off grid, we can adjust the output voltage by Voltage Adjust.

Neutral-Ground Relay: If"Neutral-Ground Relay" is checked and when inverter is in off-grid mode, the relay on the Neutral line of load port will switch on, then the N line of load port will bind to ground.

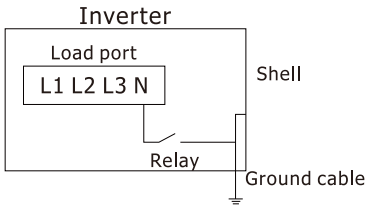

Grid Port Balanced: When the loads connected to the Load port have an unbalanced distribution on the three phases and the inverter is working in on-grid mode, enabling this function will ensure an equal power absorption from the three phases of grid.
Force Off Grid: When activated, the inverter will force off-grid. The inverter switches back to grid-tied, when the battery SOC falls below the "Grid Start" value on "Battery Setting" page.
It returns to off-grid, when the battery SOC rises above the "Grid Exit" value.
Grid Tie Meter2: When there are one or more grid-tied inverters AC coupled on the grid or load port side of the hybrid inverter, and external meter is installed for this/these grid-tied inverters, it is necessary to enable this function to upload the data of the external meter to the hybrid inverter to ensure that the power consumption data of the load is correct. The baud rate of the external meter should be set to 9600, and the ID address should be set to 2.The brand and model of the external Meter2 must match Meter1.
CT Check: The inverter will perform a self-test on the external CT when there is no load and return the test results.When multiple inverters operate in parallel under no-load conditions, only the master inverter is allowed to start and perform self-test, the slave inverters remain turned off.
MPPT Scan: After enabling this function, MPPT will perform I-V curve scanning by the MPPT Scan time to find the maximum power point again and eliminate MPPT failure caused by shadows.

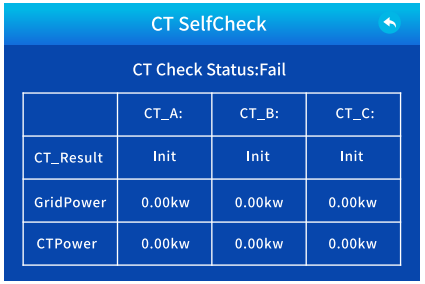

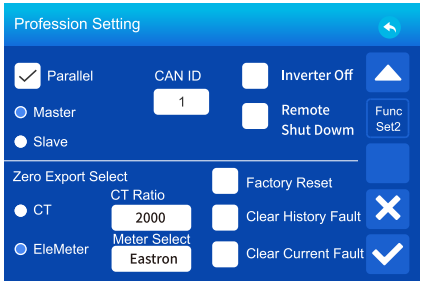

Parallel: if user want to parallel operation to Expand system capacity, we need to click the parallel. And in a parallel system, we can have and must have only one Master, and the others must be set as Slaver, and we need to set a unique CAN ID to each inverter, the CAN ID is from 1 to 12.
Master: Select any hybrid inverter in the parallel system as the master inverter, and the master inverter will manage the working mode of the parallel system. The CT needs to be connected only to the Master of the parallel system.
Slave: Set the other inverters managed by the master inverter as slave inverter.
CAN ID: The Modbus address of each inverter, should be different.
Inverter off: Switch the inverter to standby mode.
Remote Shut Down: Remotely switch the inverter to standby mode.
Zero Export Select: Select CT or EleMeter when using zero-export to CT work mode.
CT Ratio: The CT ratio of the zero-export to CT mode.
1. The default range of CT is 100A/50mA.
2. The default transformation ratio for CT is 2000:1.

Meter Select: So far we only support Eastron and CHINT.
Factory Reset: Reset all parameters of the inverter.
Clear History Fault: Clear all fault records on the LCD.
Clear Current Fault: Clear all current fault so that Inverter operating normal.

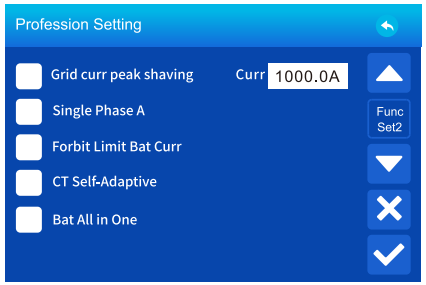

Grid curr peak shaving: when it is active, grid current will be limited within the set value.
Single Phase A: Enable this function only under single-phase grid conditions. When only Phase A grid is connected, the inverter can operate normally. Note: After enabling this function, Phases B and C must not be connected to the grid.
Forbit limit Bat Curr: When activated, the inverter will no longer limit the battery current; the battery current is constrained solely by the battery pack itself.
CT Self-Adaptive: In no-load conditions, the inverter will perform a self-check on the external CT and automatically adapt to its phase sequence and polarity. When multiple inverters are operating in parallel under no-load conditions, only the master inverter is allowed to start up and perform the self-check; the slave inverters remain shut down.
Bat All in One: The inverter and battery are integrated into one unit.

6. Work Mode

Mode I:Basic

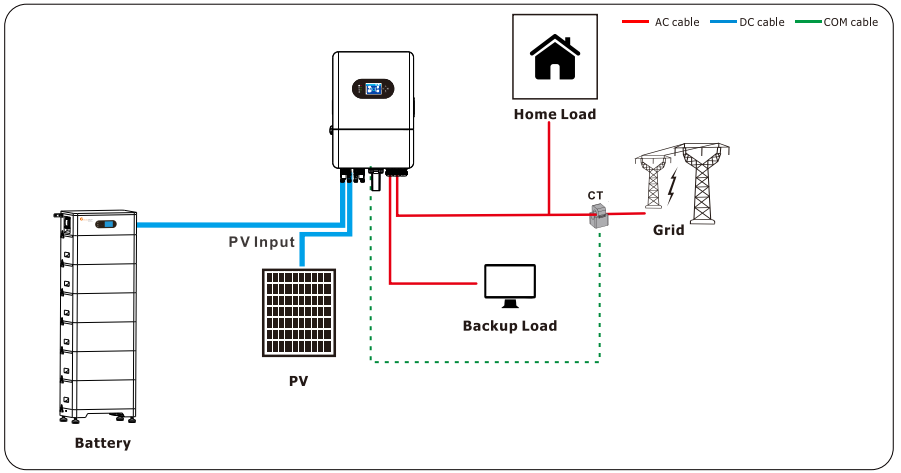

The inverter has only one battery input, with a maximum charge and discharge current of 50A.

WARNING:
1.ALL systems MUST be connected to their own battery bank.
2.DO NOT parallel batteries between inverters.

Mode Ⅱ:With Generator

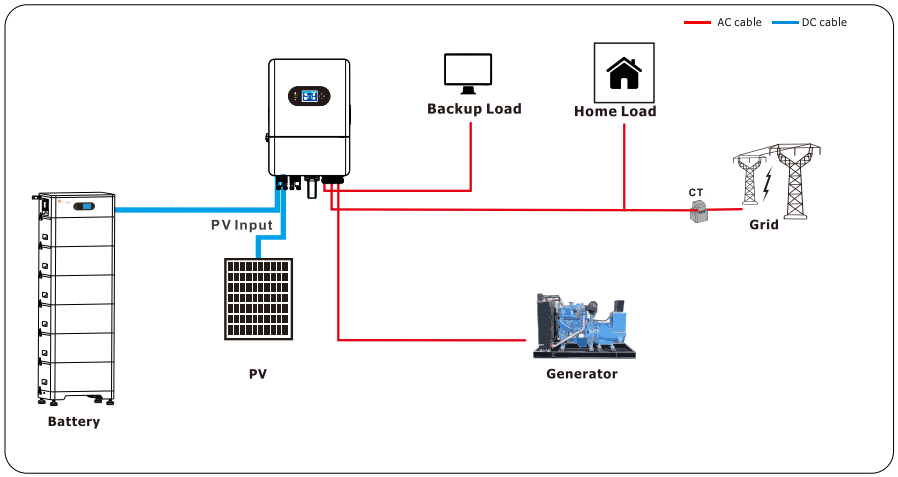

Generators Smaller than 62kW(On "GEN" Input)

1.ONLY supports three-phase 400Vac generators.
2.100A rated"GEN"terminal. 90A continuous.
3. A THD (Total Harmonic Distortion) of less than 15% is required for stable operation.

Generators Greater than 62kW (On "GRID" Input)

1. ONLY supports three-phase 400Vac generators.
2. Optimal way to integrate generators for Off-Grid or Grid-Tied systems with automatic or manual transfer switches.
3. Programming "GEN Connect to Grid Input" and generator connected to grid port.
4. DO NOT use "Sell to Grid" when generator is connected to the GRID input, can cause potential damage the generator.

Installation of CT sensors on generator lines is only required if "Peak Shaving" is intended to be used.

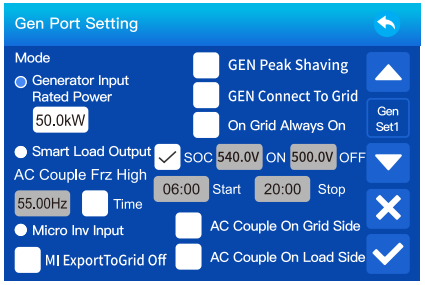

Mode Ⅲ:With Smart-Load

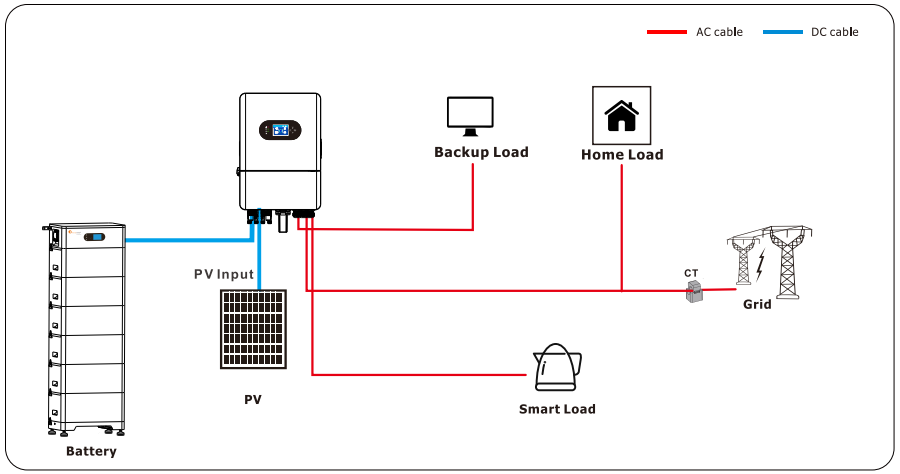

1. This mode uses the **"GEN"** input as a load output that delivers power when the battery exceeds a user programmable threshold or when the IVGM INVERTER is connected to the grid.
2. When **"SmartLoad output"** is enabled, the "GEN" input turns into an output to power high power loads such as a water heater, irrigation pump, AC unit, pool pump, or any other load.
3. When **"On Grid always on"** is enabled, the "GEN" terminal will always output power as long as the grid is connected, regardless of battery charge.

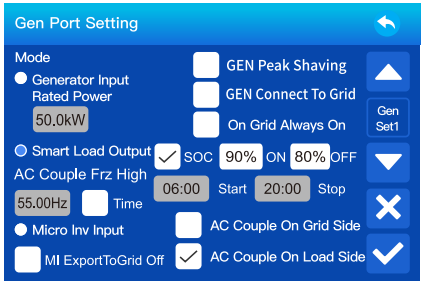

Mode IV: AC Couple

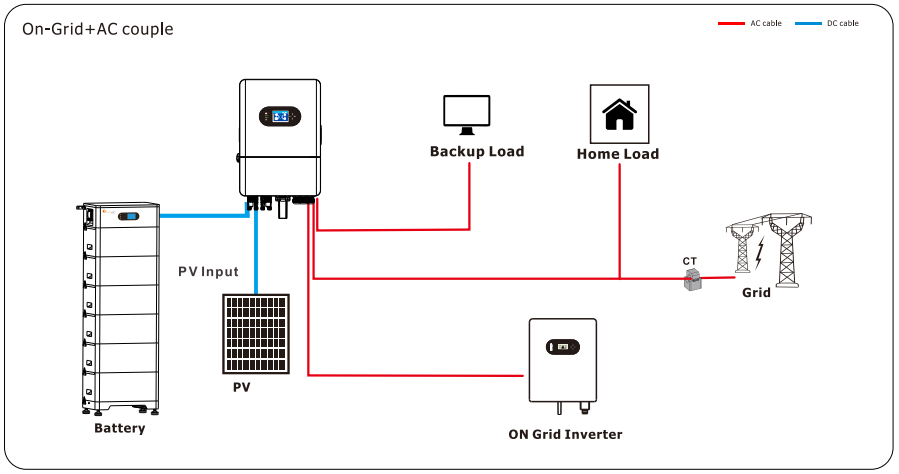

The IVGM INVERTER supports the addition of grid-tied solar inverters, this allows the systems total solar power input to be expanded by coupling 3Φ micro or string inverters into the "GEN" terminals of the inverter.

An entirely AC-coupled solar system is not recommended as power control and monitoring is limited but is supported. Having DC-coupled modules, or a combination of DC-coupled modules and AC-coupled inverters is always preferred. AC-coupled inverters used in this application need to be either EN 50549 or VDE 4105 certified. This certification confirms the inverters' ability to disconnect from the grid based on frequency and ensures that the IVGM INVERTER will safely be able to frequency shift to control the AC coupled production.
In off-grid systems or during grid-forming operation, the IVGM INVERTER uses frequency shifting to curtail and shutdown AC-coupled inverters when the battery is full, allowing AC-coupled solar to produce power in an outage scenario. When the IVGM INVERTER is connected to the grid any AC-coupled inverters connected will always sell all excess solar power back to the grid. Selecting "Limited to Load" will NOT limit production when AC coupled.

AC Coupling on the GRID Side
Installing AC coupled inverters upstream of the GRID port of the IVGM INVERTER, such as with a load or supply side connection, is supported for grid connected systems but has some notable limitations when using the inverter for backup or grid-forming mode:
- Does NOT allow the usage of grid-tied inverter production during grid outages to charge batteries or power loads.
- Does NOT allow monitoring of PV production in inverter and Fsolar monitoring.

AC Coupling on the GEN Terminal
AC Coupling via the GEN Terminal is the preferred method for integrating AC-coupled solar on the IVGM INVERTER. This method offers several key advantages:
- Allows the usage of grid-tied inverter production during grid outages.
- Allows the integration of grid-tie inverters in off-grid systems.
Using the GEN terminal also allows for comprehensive monitoring of solar production, giving users valuable insights into the system's performance.

7. Warranty

As to Warranty terms, please refer to <General Warranty Agreement>.
Under the guidance of our company, customers return our products so that our company can provide service of maintenance or replacement of products of the same value. Customers need to pay the necessary freight and other related costs. Any replacement or repair of the product will cover the remaining warranty period of the product. If any part of the product or product is replaced by the company itself during the warranty period, all rights and interests of there placement product or component belong to the company.

Factory warranty does not include damage due to the following reasons:
- Damage during transportation of equipment;
- Damage caused by incorrect installation or commissioning;
- Damage caused by failure to comply with operation instructions, installation instructions or maintenance instructions;
- Damage caused by attempts to modify, alter or repair products;
- Damage caused by incorrect use or operation;
- Damage caused by insufficient ventilation of equipment;
- Damage caused by failure to comply with applicable safety standards or regulations;
- Damage caused by natural disasters or force majeure (e.g. floods, lightning, over voltage, storms, fires, etc.)

In addition, normal wear or any other failure will not affect the basic operation of the product. Any external scratches, stains or natural mechanical wear does not represent a defect in the product.

8. Troubleshooting

Perform troubleshooting according to the solutions in the table below. Contact the after-sales service if these methods do not work.
Collect the information below before contacting the after-sales service, so that the problem scan be solved quickly.
- Inverter information like serial number, firmware version, installation date, fault time, fault freguency,etc.
- Installation environment, including weather conditions, whether the PV modules are sheltered or shadowed, etc. It is recommended to provide some photos and videos to assist in analyzing the problem.
- Utility grid situation.

9. APP Download the APP

Method 1: Access https://download.felicitysolar.com using the mobile phone browser and download the latest installation package.
Method 2: Scan the following QR code and download the latest installation package.

Please refer the Fsolar End user manual, register the installer and create a plant and owner (skip this step if the account has been created). You can obtain the Fsolar End user manual by scanning the following QR code.

10. Warning Code

The inverter's fault LED does not remain lit, but an error code flashes on the screen.
In most cases, these codes indicate warnings rather than actual faults

Warning Code	Warning Information	Troubleshooting and Solutions
18	Fan 1 Alarm	Fan 1 stops abnormally, check fan wiring.
19	Fan 2 Alarm	Fan 2 stops abnormally, check fan wiring.
20	Fan 3 Alarm	Fan 3 stops abnormally, check fan wiring.
22	Internal Fan Alarm	Internal fan stops working abnormally, check internal fan wiring.

11. Fault Code

The inverter's fault indicator light is solid red, and a fault code is flashing on the screen,
Please follow the steps in the table below.
If the issue persists, contact Felicity's official technical support team immediately.

Warning Code	Warning Information	Troubleshooting and Solutions
01	PV Overvoltage Fault	The voltage of the PV is too high, check the voltage of the string
05	PV Overcurrent Fault	The current of the PV is too large, check the string current
09	PV Reverse Connection Fault	PV string positive and negative connection, check the string wiring
13	PV Arc Fault	Reserved
14	Battery 1 Overvoltage Fault	Battery 1 voltage is too high, the battery should be discharged
18	Battery 1 Undervoltage Fault	Battery 1 voltage is too low, the battery should be charged
20	Battery 1 Overcurrent Fault	Battery 1 current is too large, check the battery charge and discharge power
24	Battery 1 Reverse Connection Fault	Battery 1 positive and negative poles are reversed, check the battery wiring
26	Battery 1 Relay Circuit Fault	Battery 1 relay not closing properly causing open circuit, or battery 1 relay not properly disconnected causing short circuit, shutdown and restart
30	Battery 1 Soft Start Fault	Battery 1 fails to raise the input voltage normally, shutdown and restart
32	Battery 1 SOC Low Fault	Battery 1 SOC is too low, the battery should be charged
35	Bus Overvoltage Fault	Bus voltage is too high, shutdown and restart.
37	Bus Undervoltage Fault	Bus voltage is too low, shutdown and restart.
38	Positive and Negative Bus Imbalance Fault	Positive bus voltage does not match negative bus voltage, shutdown and restart.
39	Bus Soft Start Fault	Bus voltage fails to rise normally at startup, shutdown and restart.
41	Balanced Bridge Overcurrent Fault	Balanced bridge current is too high, shutdown and restart.

43	Inverter Self Check Fault	Reserved
44	Inverter Soft Start Fault	Inverter voltage fails to rise normally at startup, shutdown and restart.
45	Inverter Voltage Fault	Inverter voltage is too high, shutdown and restart.
46	Inverter Overcurrent Fault	Inverter current is too high, check the given power and load size.
47	Inverter hardware overcurrent Fault	The inverter current exceeds the hardware protection limit Check the given power and load size
48	Inverter Short Circuit Fault	Short circuit at inverter, shutdown and restart.
49	Inverter Voltage DC Component Fault	Inverter voltage DC component is too high, shutdown and restart.
50	Inverter Current DC Component Fault	Inverter current DC component is too high, shutdown and restart.
51	Grid Overvoltage Fault	The grid voltage is too high, check whether the grid voltage is within the normal range
52	Grid Undervoltage Fault	The grid voltage is too low, check whether the grid voltage is within the normal range
53	Grid Overfrequency Fault	The grid frequency is too high, check whether the grid frequency is within the normal range
54	Grid Underfrequency Fault	The grid frequency is too low, check whether the grid frequency is within the normal range
55	Grid Reverse Sequence Fault	The grid phase sequence is reversed, check the grid phase sequence wiring
56	Grid Overload Fault	The load of the grid access is too large, and the load should be reduced
59	Load Overload Fault	The load exceeds, the load should be reduced
63	EPO Fault	Inverter emergency shutdown
64	IGBT Overtemperature Fault	Inverter device temperature is too high.
65	Ambient Overtemperature Fault	The ambient temperature of the inverter is too high

66	Fan Fault	Fan is faulty, check whether the fan is normal
71	EEPROM Fault	There was an error with the EEPROM write
72	12V Auxiliary Power Supply Fault	Failure of 12V auxiliary power supply.
73	CT or Hall Open Circuit Fault	Current sensing device is faulty, check CT or Hall element connections.
74	Main and Auxiliary DSP Communication Fault	There is an error in the DSP communication, try to upgrade the software
76	Leakage Current Fault	The leakage current of the inverter is too large, check the wiring of the inverter
77	BUS Insulation Impedance Fault	The insulation of the BUS string is abnormal
78	BAT1 Insulation Impedance Fault	Battery 1 insulation is abnormal
80	GND Fault	Reserved
81	GEN Relay Fault	Gen relay not closing properly causing open circuit, or Gen relay not properly disconnected causing short circuit, shutdown and restart
82	Grid Relay Fault	Grid relay not closing properly causing open circuit, or Grid relay not properly disconnected causing short circuit, shutdown and restart
83	Inv Relay Fault	Inv relay not closing properly causing open circuit, or Inv relay not properly disconnected causing short circuit, shutdown and restart
85	Load Relay Fault	Load relay not closing properly causing open circuit, or Load relay not properly disconnected causing short circuit, shutdown and restart
86	PWM SYNC Fault	The inverter is connected to abnormal parallel communication
87	Parallel CAN Communication Fault	The inverter is connected to abnormal parallel communication
88	Parallel Master Loss Fault	Parallel master disconnects from the system, check whether the master is normal
89	Zero SYNC Fault	The inverter is connected to abnormal parallel communication

90	DRM Fault	Reserved
92	BMS1 Communication Fault	BMS1 fails to communicate normally, check the BMS1 communication cable.
95	Master Clash Fault	There is more than two Parallel host, check whether the hosts are normal
96	Gen Overvoltage Fault	The gen voltage is too high, check whether the gen voltage is within the normal range
97	Gen Undervoltage Fault	The gen voltage is too high, check whether the gen voltage is within the normal range
98	Gen Overfrequency Fault	The gen frequency is too high, check whether the gen frequency is within the normal range
99	Gen Underfrequency Fault	The gen frequency is too low, check whether the gen frequency is within the normal range
100	Gen Reverse Sequence Fault	The gen phase sequence is reversed, check the gen phase sequence wiring
101	Gen Overload Fault	The load of the gen access is too large, and the load should be reduced
102	MCU Communication Fault	There is an error in the MCU communication, try to upgrade the software
103	Manual Turn Off	Remotely shutdown (It means the inverter is remotely controlled).
104	Mode Change Off	1. When the grid type and frequency have changed, it will report F104. 2. When the battery mode has been changed to "No battery" mode, it will report F104.
105	Flash Data Missing	The MCU flash data is missing, try to upgrade the software

12 Appendix

Model	IVGM25K HP3G3	IVGM20K HP3G3	IVGM15K HP3G3	IVGM12K HP3G3	IVGM10K HP3G3	IVGM9K9 HP3G3	IVGM8K HP3G3
Battery Input Data							
Battery Type	LFP(LiFePO4)						
Battery Voltage Range	160~700Vdc						
Max. Charging Current	50(A)						
Max. Discharging Current	50(A)						
Number of battery input	1						
PV String Input Data							
Max.DC Access power	50 kW	40 kW	30 kW	24 kW	20 kW	19.8 kW	16 kW
Max. DC Input Power	40 kW	32 kW	24 kW	19.2 kW	16 kW	15.8 kW	12.8 kW
Max Recommended DC Power (per tracker)	20kW/20kW	16kW/16kW	16kW/8kW	12.8kW/6.4kW	8kW/8kW	7.9kW/7.9kW	6.4kW/6.4kW
Max. DC Input Voltage	1000Vdc						
Min. DC Input Voltage	150Vdc						
Start-up Voltage	180Vdc						
Rated DC Input Voltage	600Vdc						
MPPT Range	150~850Vdc						
Full Load DC Voltage Range	476~850Vdc	381~850Vdc	381~850Vdc	305~850Vdc	381~850Vdc	376~850Vdc	305~850Vdc
PV Input Current	42+42 (A)		42+21 (A)		21+21 (A)		
Max. PV Isc	63+63 (A)		63+32 (A)		32+32 (A)		
No.of MPP Trackers	2		2		2		
No.of Strings per MPP Tracker	2/2		2/1		1/1		
AC Output Data							
Rated AC Input/ Output Power	25 kW	20 kW	15 kW	12 kW	10 kW	9.9 kW	8 kW
Rated AC Input/Output Apparent Power	25 kVA	20 kVA	15 kVA	12 kVA	10 kVA	9.9 kVA	8 kVA
Max. AC Input/Output Apparent Power	27.5 kVA	22 kVA	16.5 kVA	13.2 kVA	11 kVA	9.9 kVA	8. 8 kVA
AC Input/Output Rated Current[1]	36.3 A	29 A	21.7 A	17.4 A	14.5 A	14.3 A	11.6 A
Max. AC Current[2]	39.8 A	32 A	23.8 A	19.2 A	16 A	14.3 A	12.8 A
Peak Power(off-grid)(W)	1.5 times of rated power,10s						
Max. Continuous AC Passthrough (grid to load)(A)	80 (A)				40 (A)		
Rated AC Voltage	220/380Vac,230/400Vac(-20%~+15%)						
AC Wiring Mode	3L+N+PE						
Rated AC Frequency	50 /60 Hz(45~55Hz/55~65Hz)						
THDI	<3%(At Rated Power)						
Power Factor	0.8(leading) to 0.8(lagging)						
DC Injection Current	<0.5% In						

Efficiency	
Max. efficiency	97.6%
Euro efficiency	97%
MPPT efficiency	>99%
Equipment Protection	
DC Polarity Reverse Connection Protection	YES
AC Output Overcurrent Protection	YES
AC Output Overvoltage Protection	YES
AC Output Short Circuit Protection	YES
Thermal Protection	YES
Insulation Resistor Detection	YES
DC Component Monitoring	YES
Power Network Monitoring	YES
Island Protection Monitoring	YES
DC Switch	YES
Active Power Derating at Overvoltage	YES
Residual Current Detection	YES
Surge Protection Level	TYPE II(DC), TYPE II(AC)
Over Voltage Category	OVC II(DC), OVC III(AC)
Certification and Standards	
Grid Regulation	VDE4105,EN50549-1,AS 4777.2, UNE 217002, UNE 217001, RD 647, PGC:2016,EIFS 2018:2 (Type A), OVE-Richtlinie R 25:2020, PPDS ANNEX 4:2022, PTPiREE 2024-10 (Type A)
Safety EMC / Standard	IEC/EN 61000-6-1/2/3/4,IEC/EN 62109-1,IEC/EN 62109-2

General Date	
Net Weight	39.4kg
Gross Weight	48.6kg
Product Dimension	642x445x237.5mm
Package Dimension	789x568x367mm
Protection Degree	IP66
Operating Temperature Range	-40 to 60 ℃ (>45 ℃ derating)
Humidity	0 ~ 100 % (No condensation)
Altitude	3000m (>2000m derating)
Cooling	Smart cooling
Communication with BMS	RS485, CAN
Monitor module	WiFi
Installation Style	Wall-mounted
Warranty	5 Years/10 Years the Warranty Period Depends the Final Installation Site of Inverter More Info Please Refer to Warranty Policy
[1]&[2] Data based on rated AC voltage 230/400 Vac.	